LEGO TECHNIC

42039

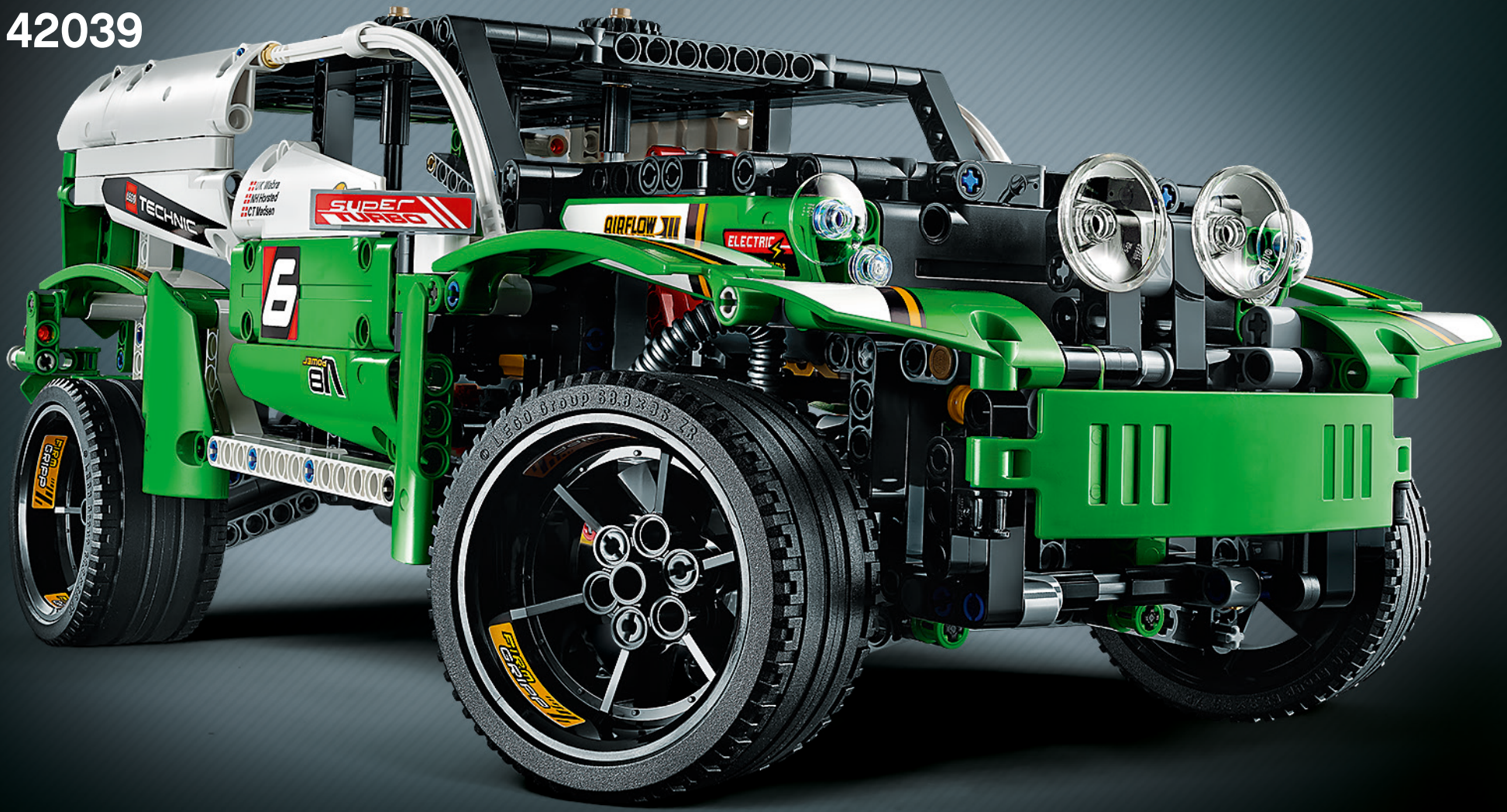

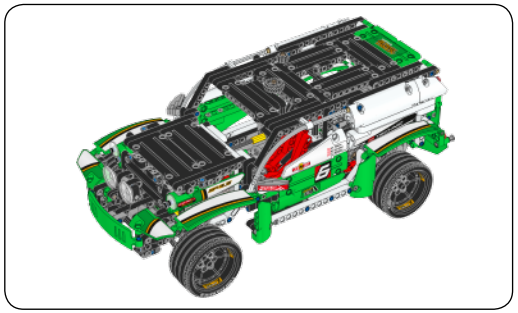

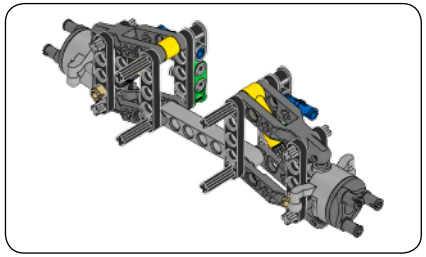

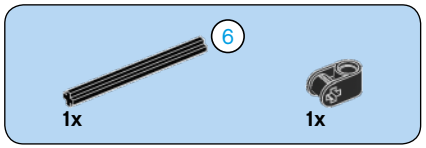

1

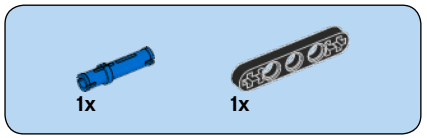

2

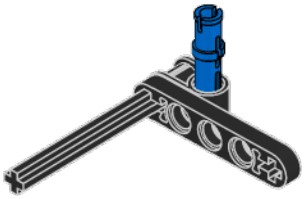

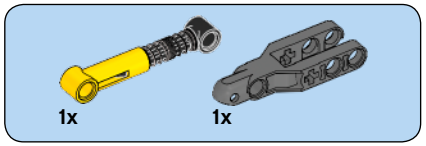

3

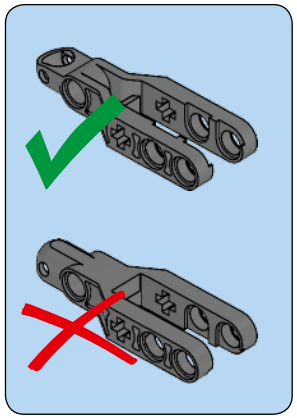

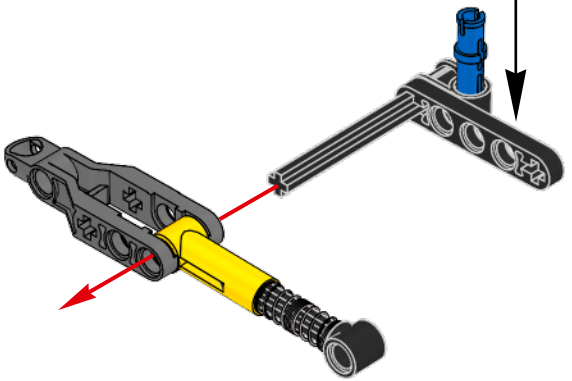

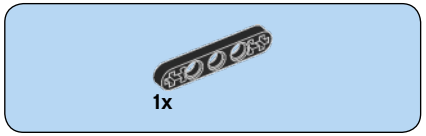

4

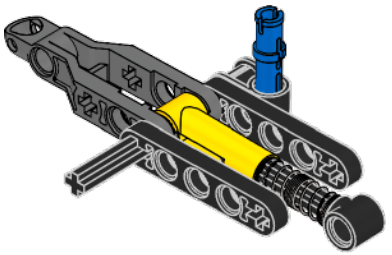

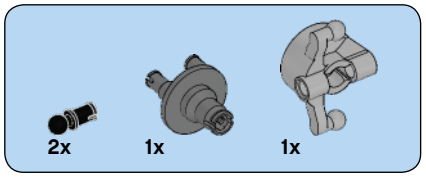

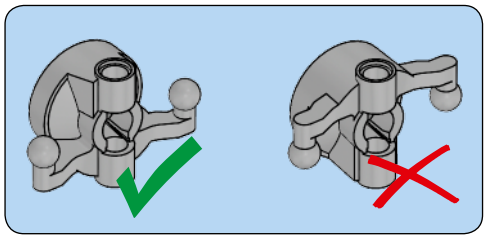

5

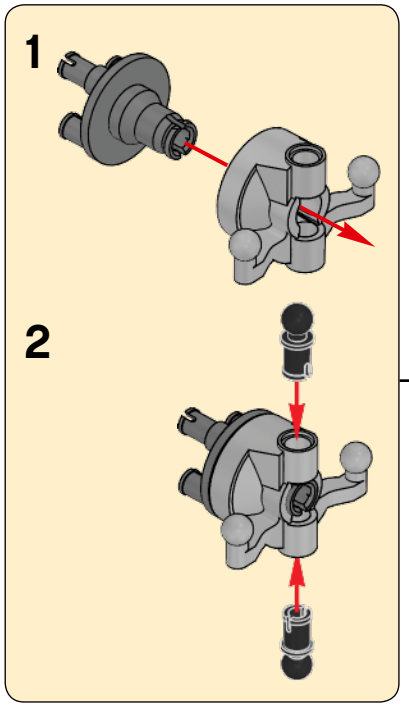

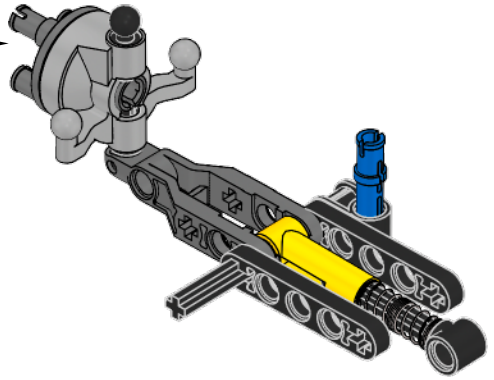

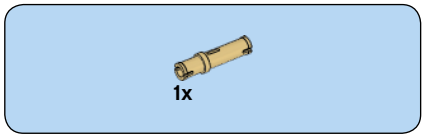

6

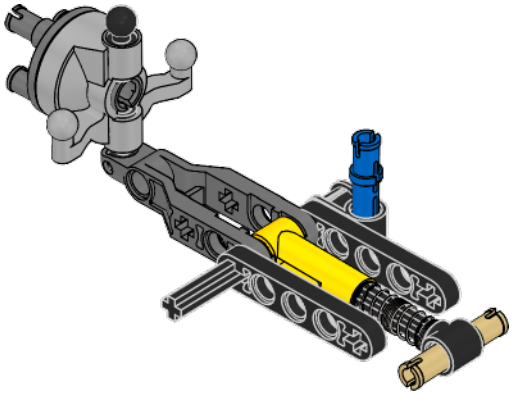

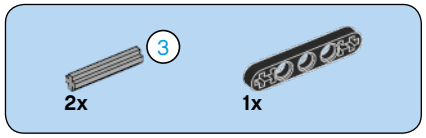

7

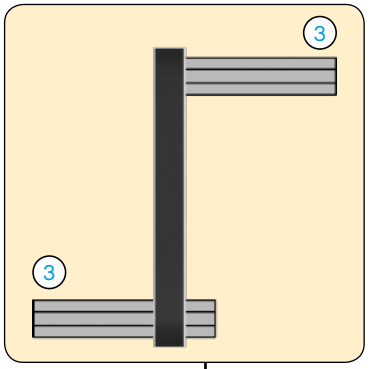

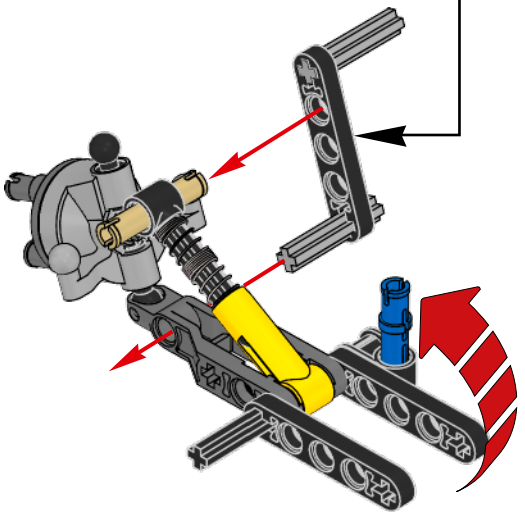

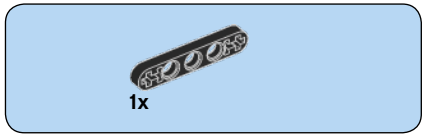

8

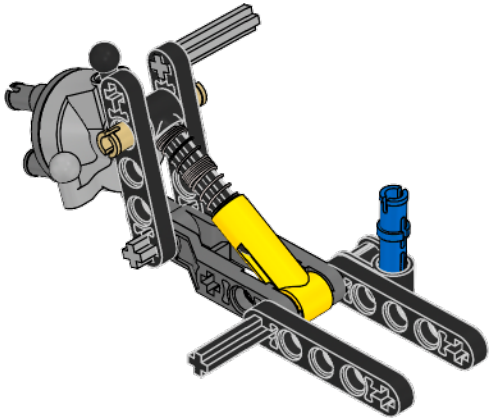

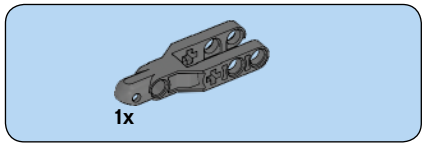

9

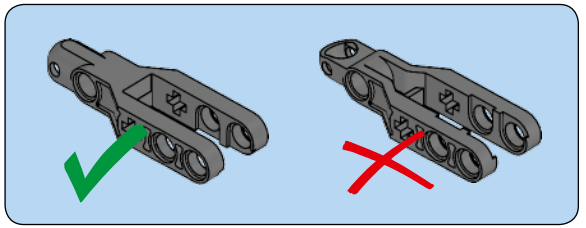

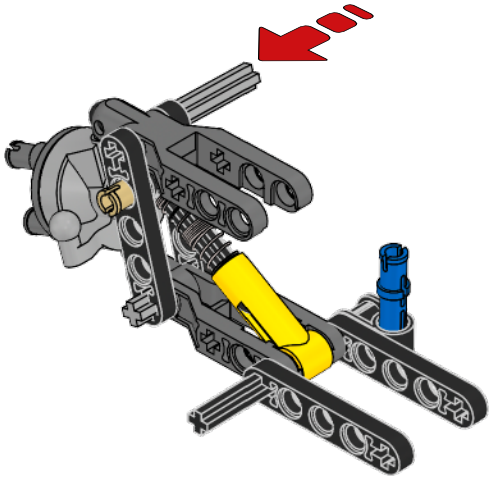

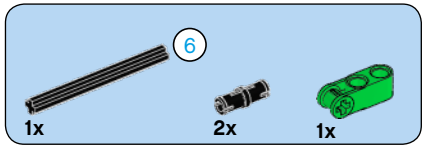

10

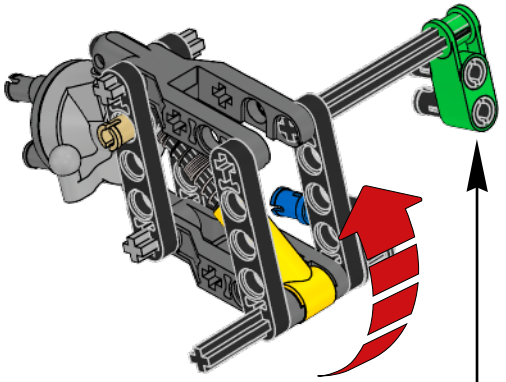

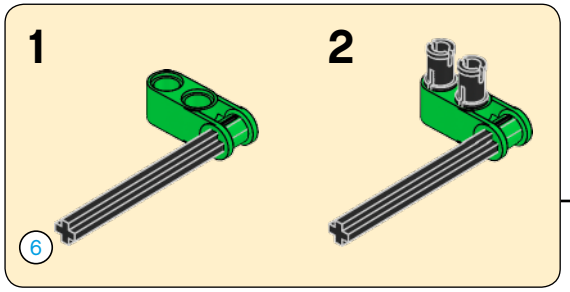

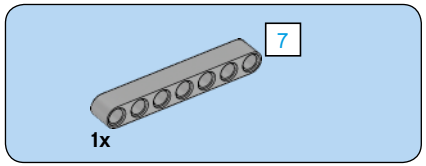

11

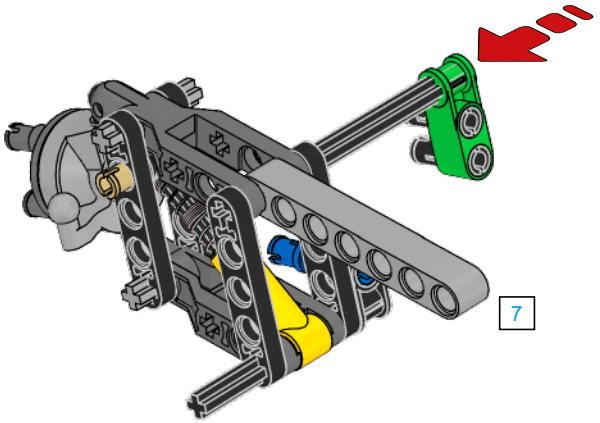

12

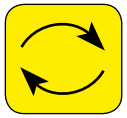

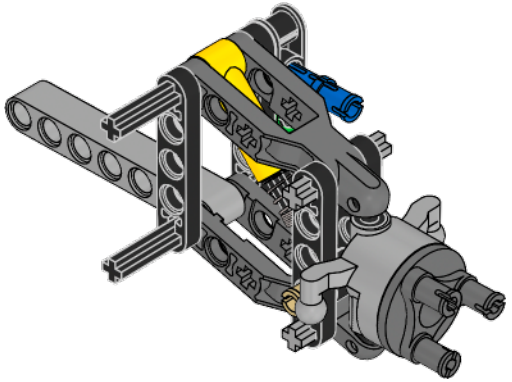

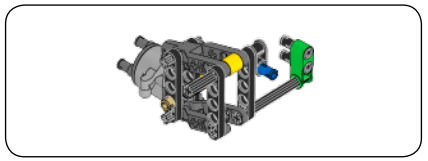

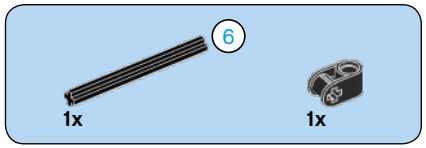

13

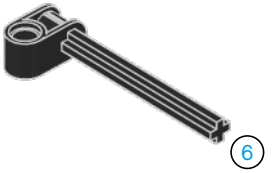

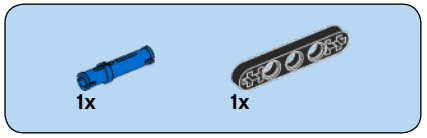

14

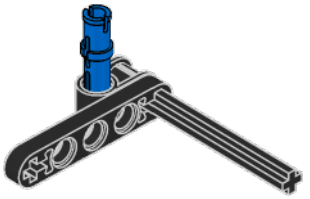

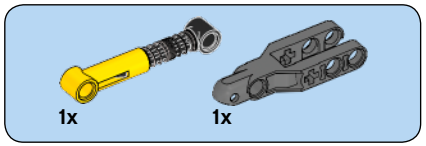

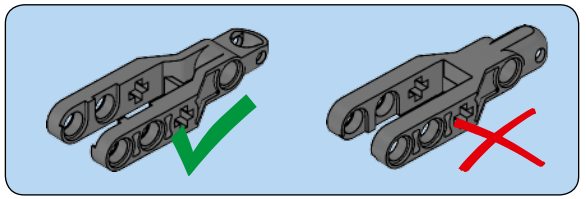

15

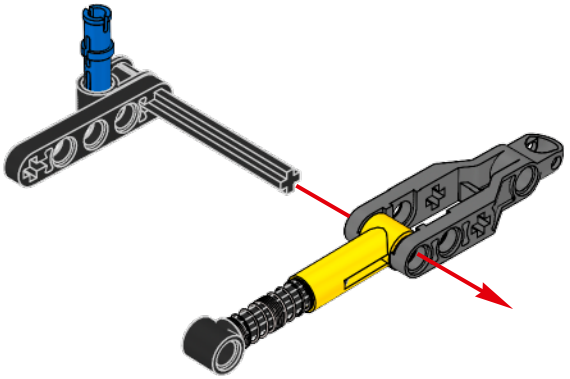

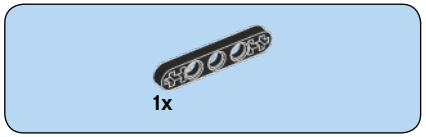

16

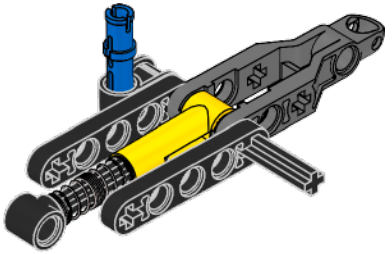

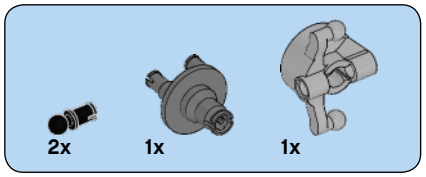

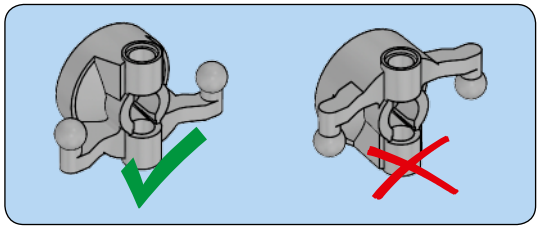

17

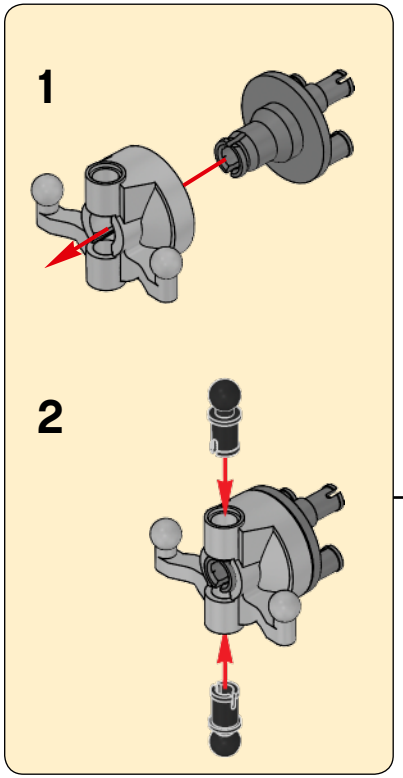

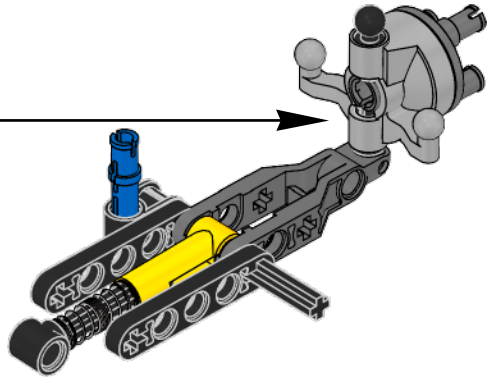

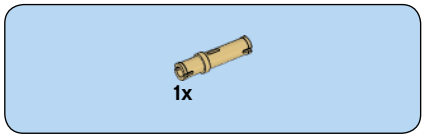

18

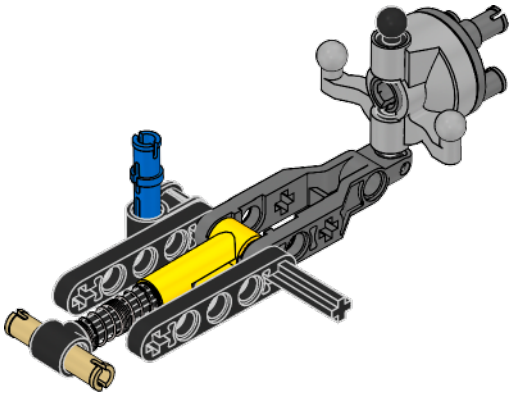

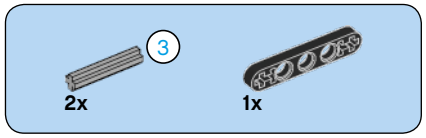

19

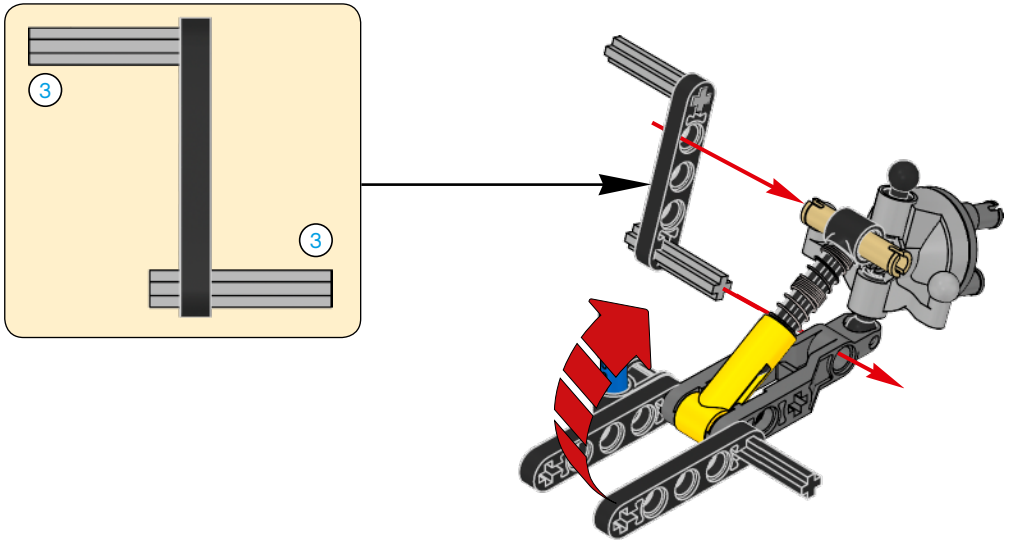

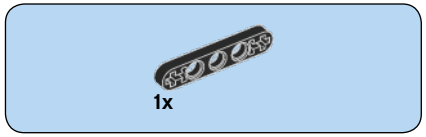

20

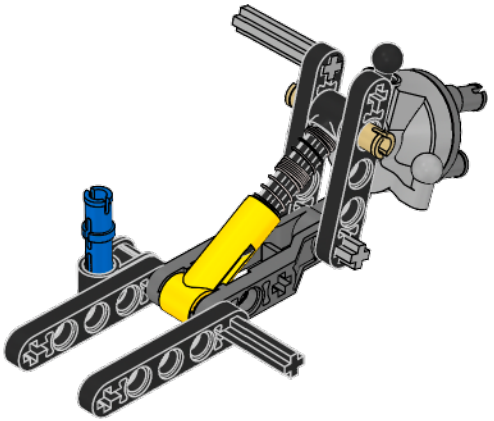

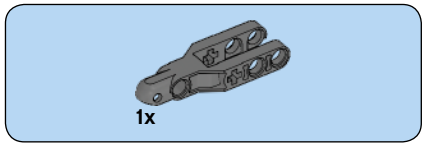

21

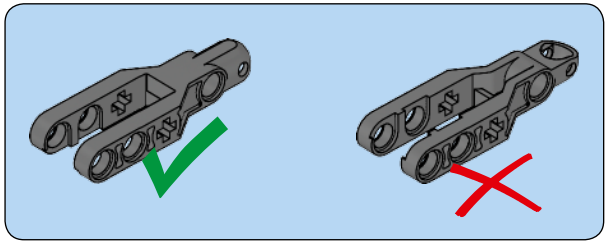

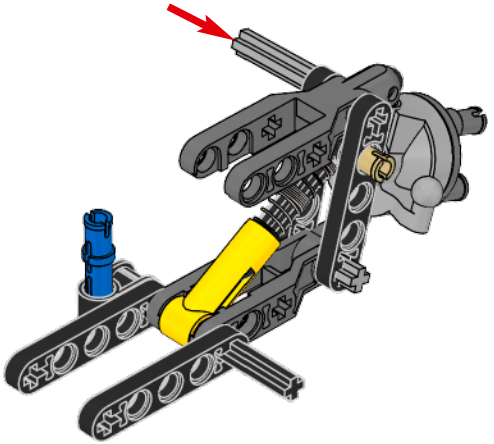

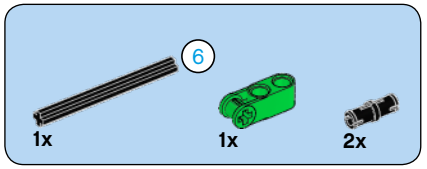

22

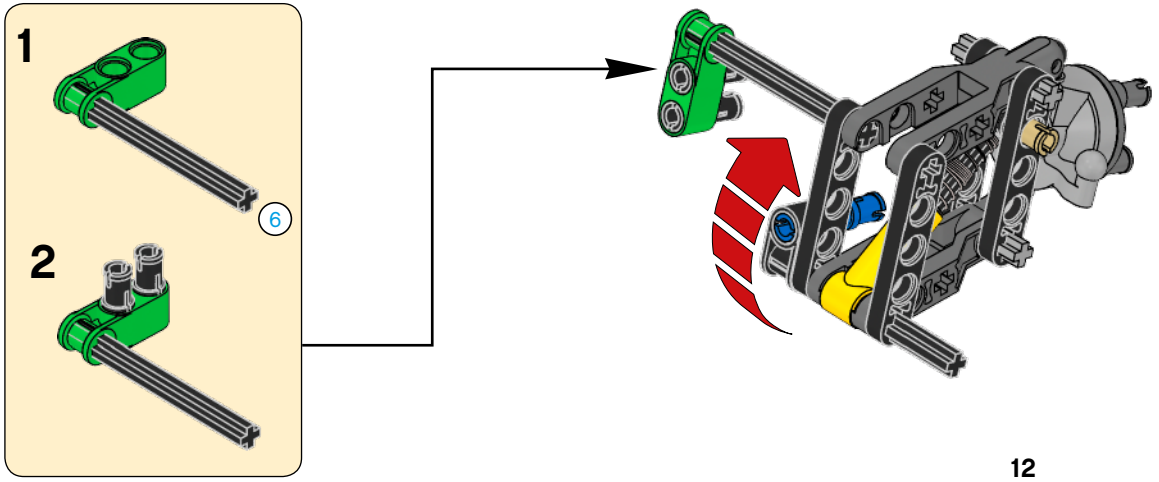

23

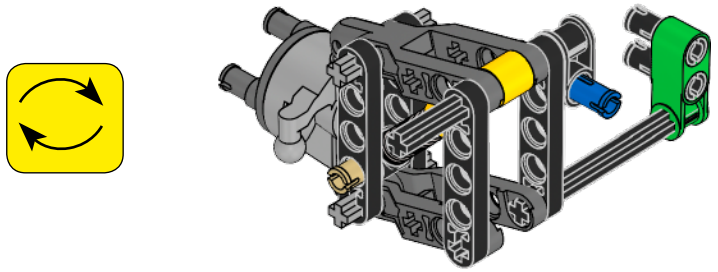

24

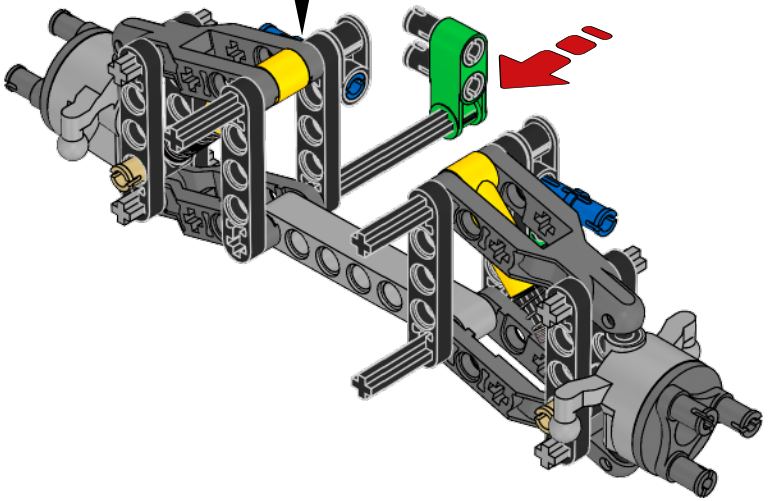

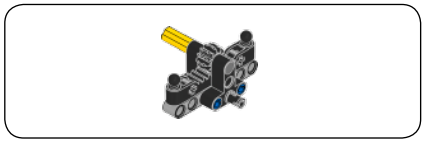

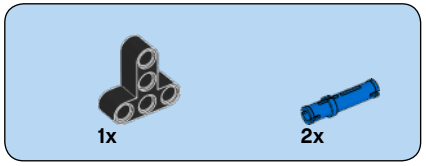

25

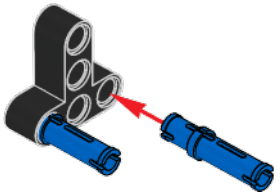

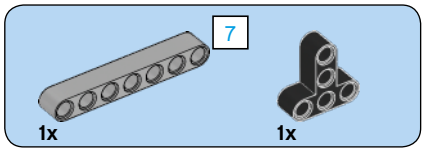

26

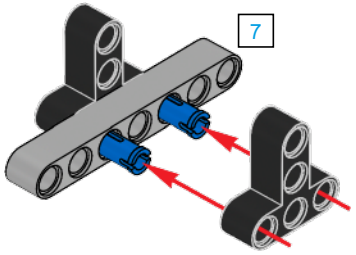

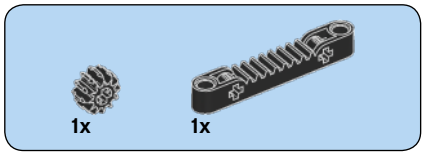

27

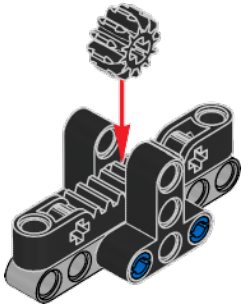

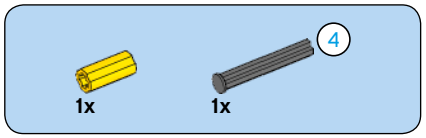

28

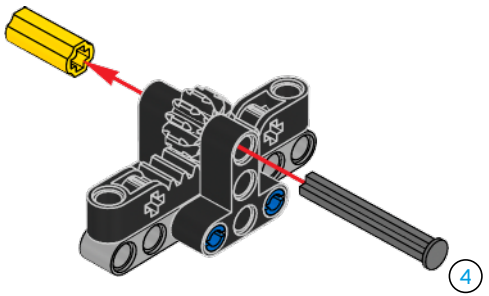

29

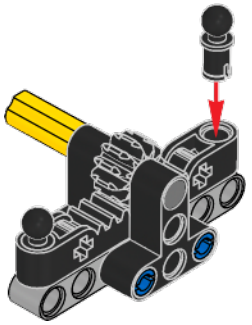

30

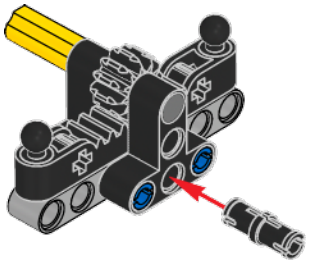

31

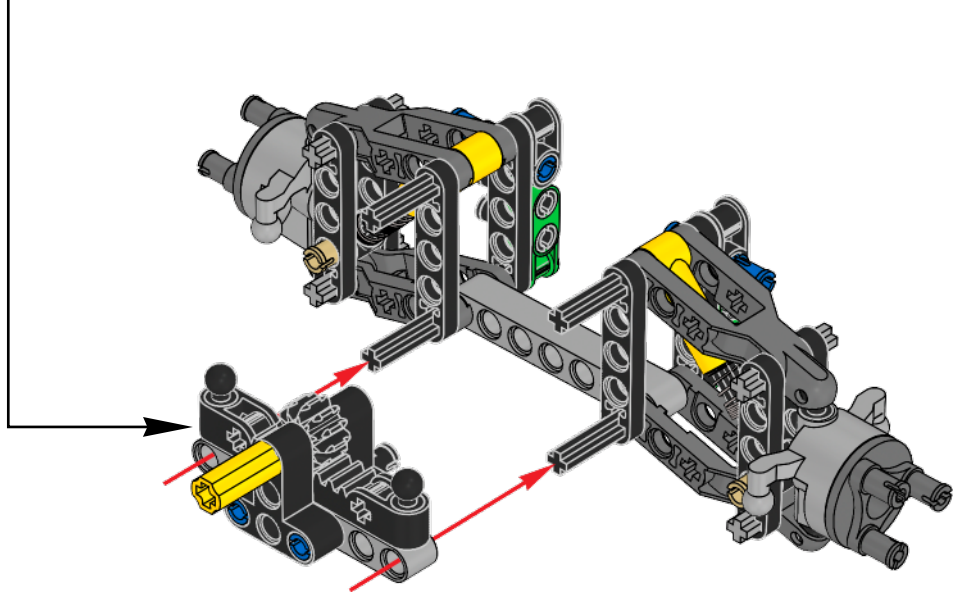

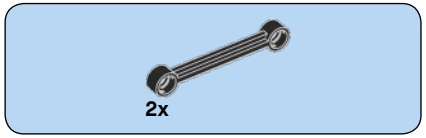

32

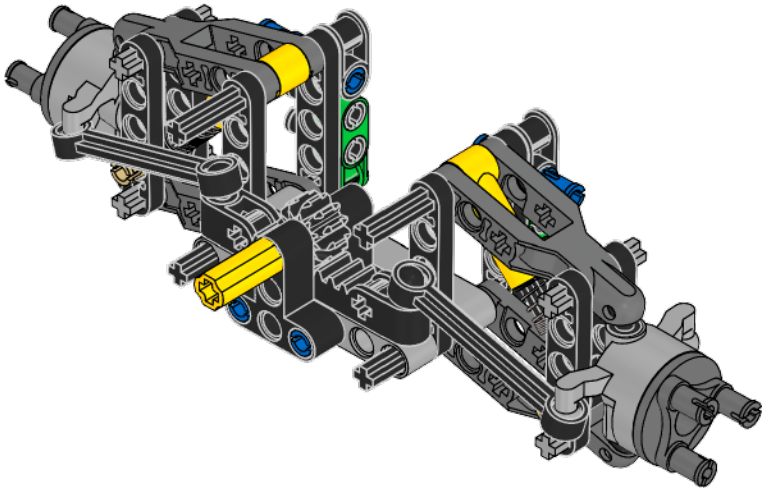

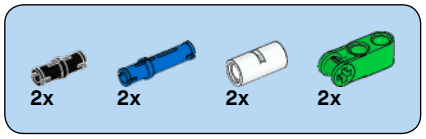

33

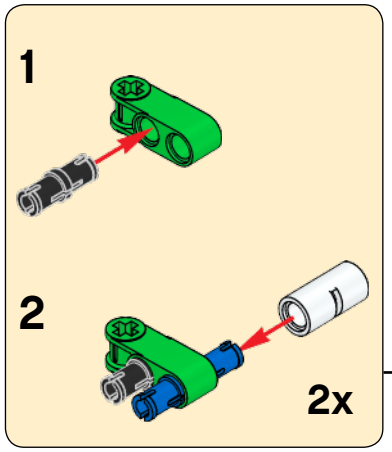

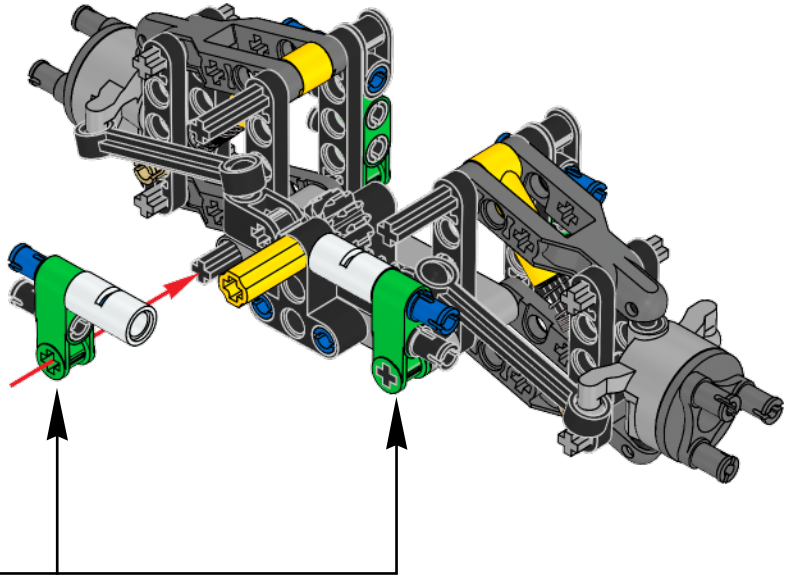

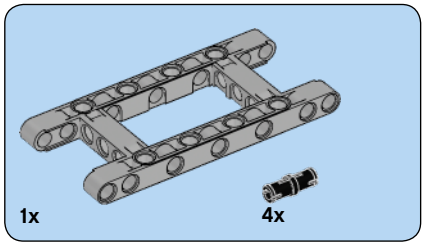

34

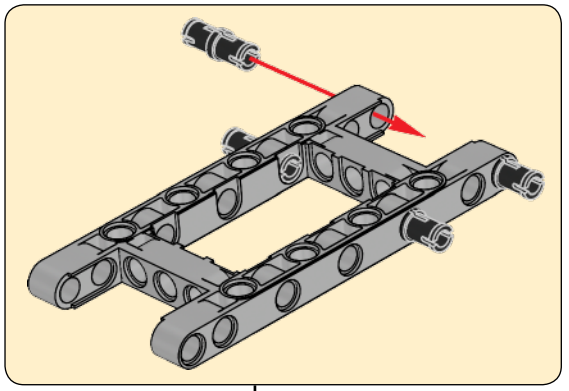

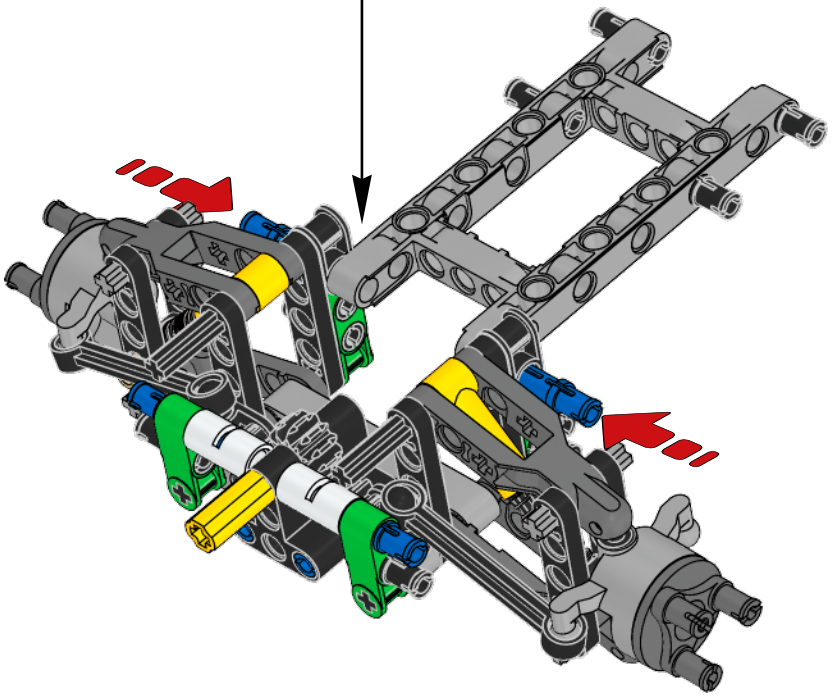

35

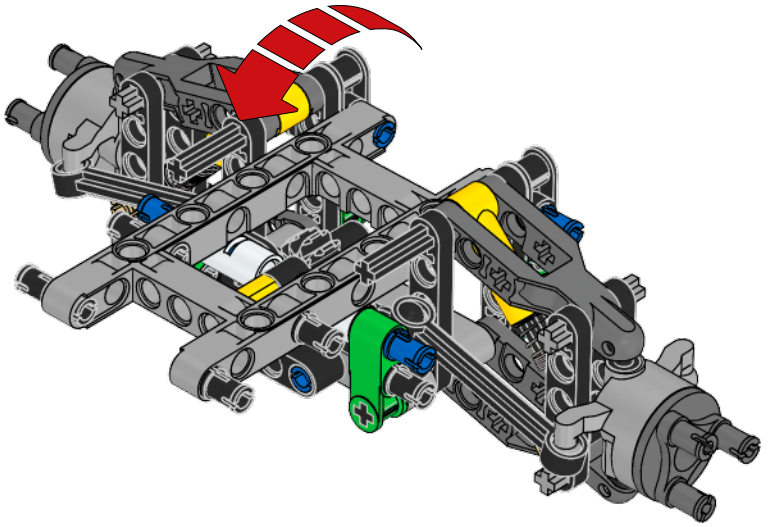

2x

36

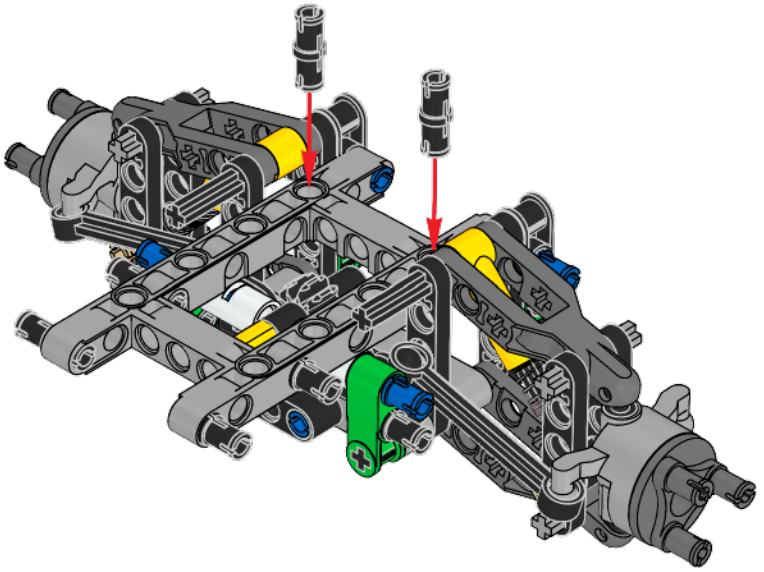

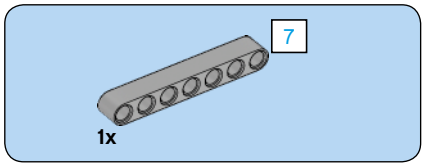

37

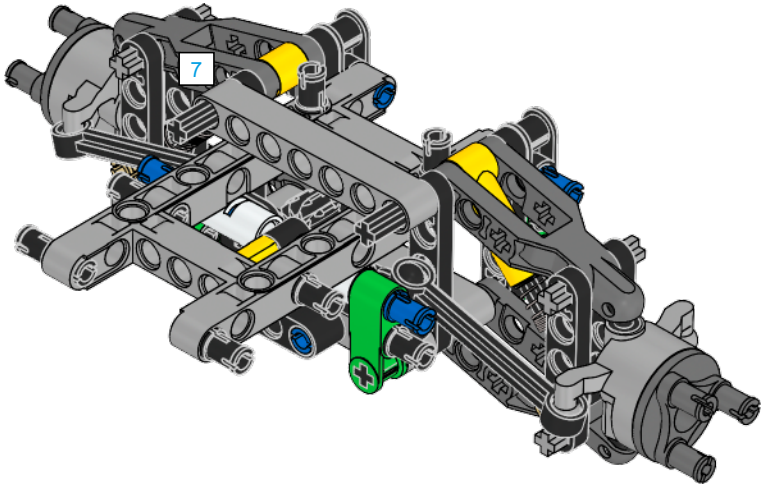

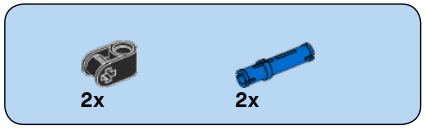

38

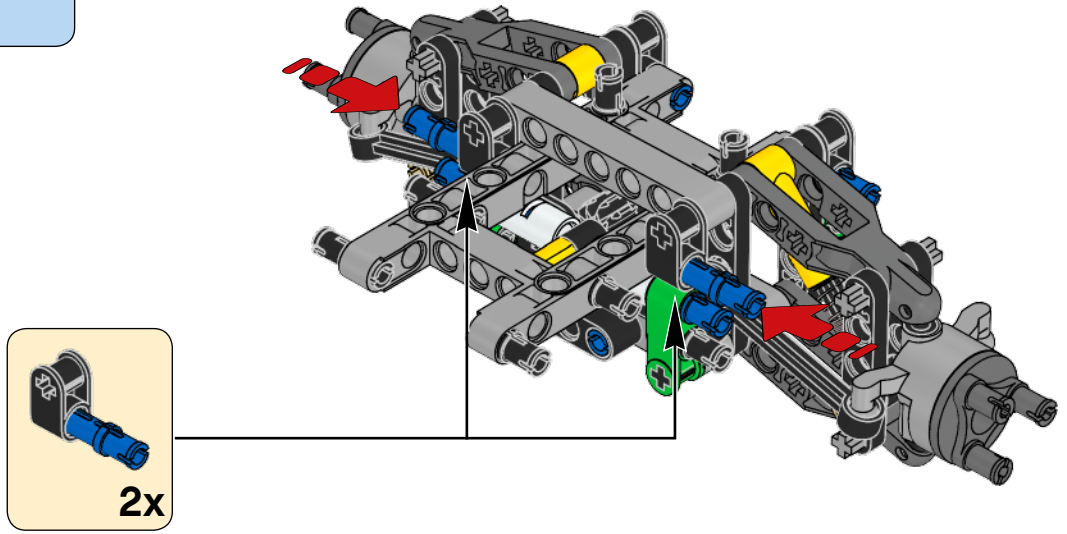

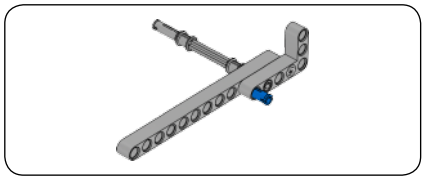

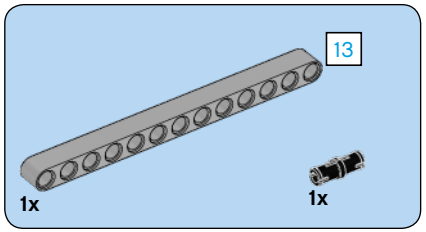

39

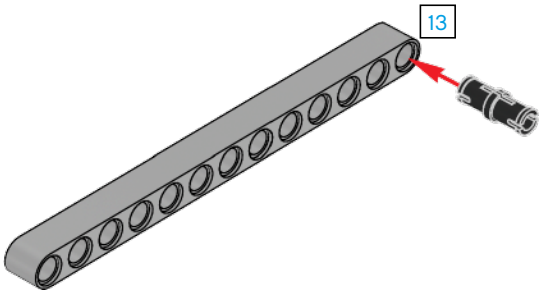

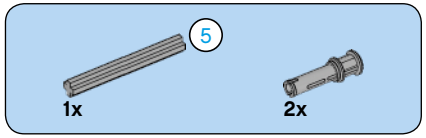

40

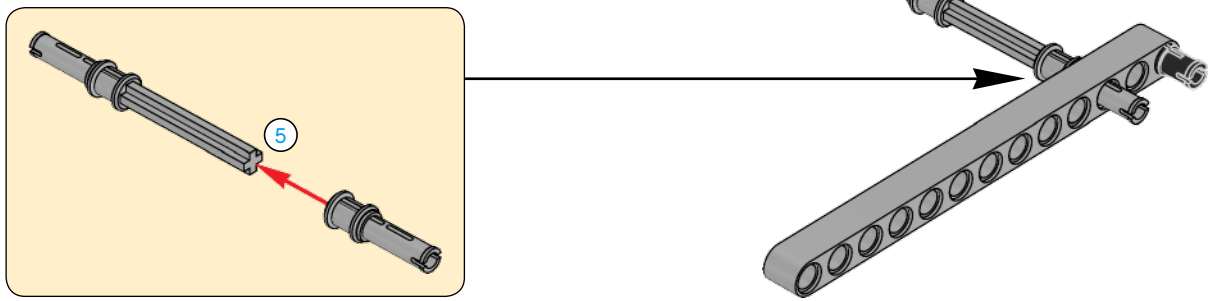

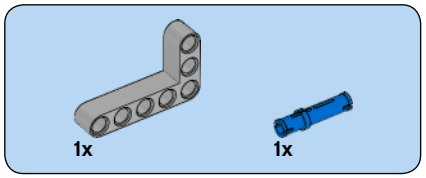

41

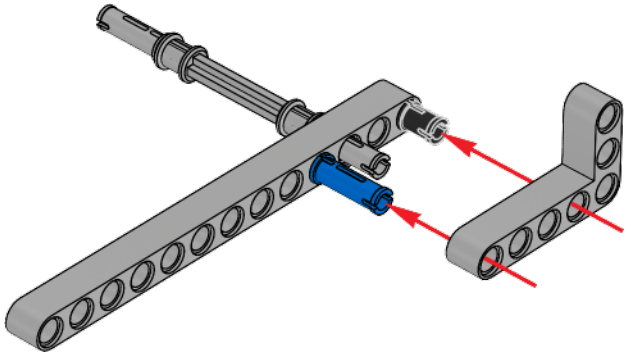

42

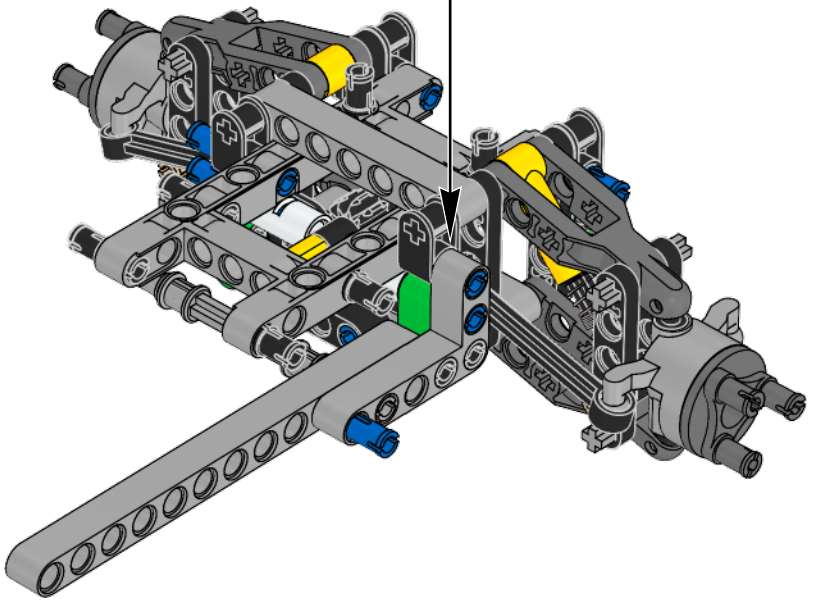

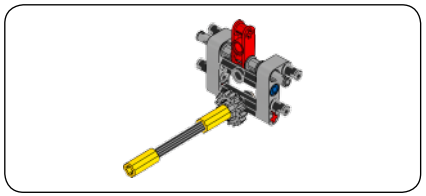

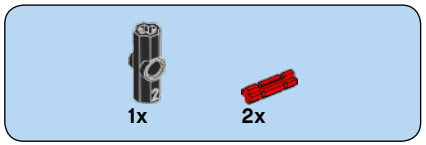

43

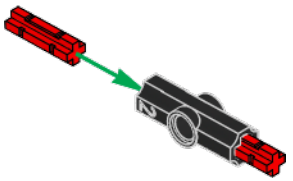

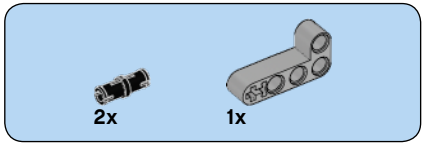

44

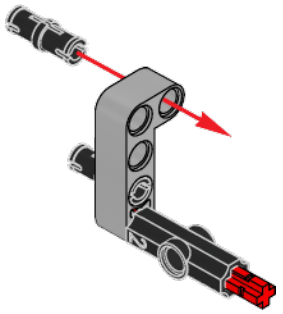

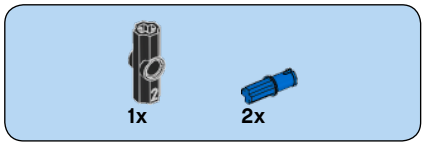

45

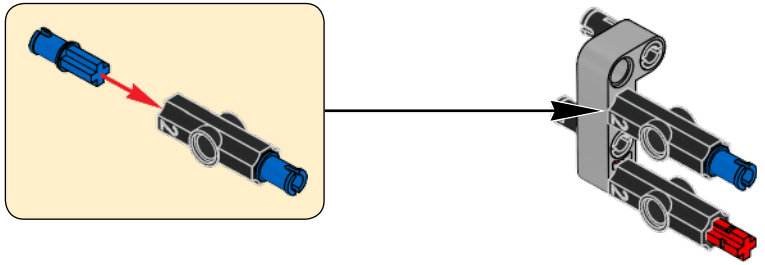

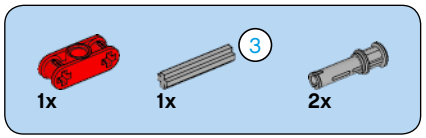

46

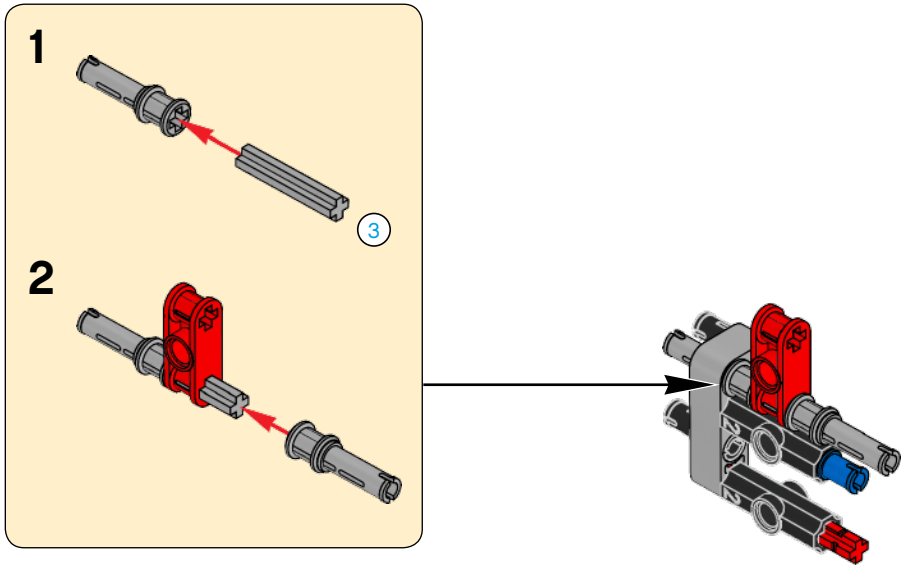

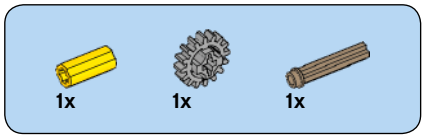

47

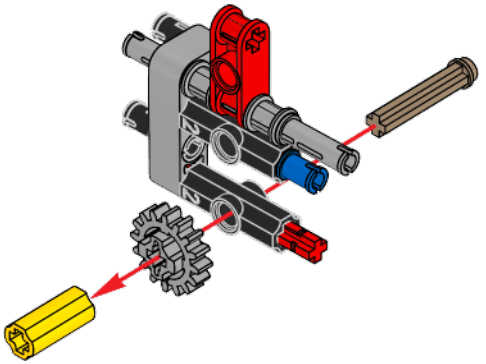

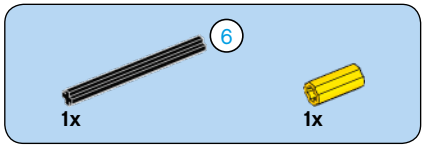

48

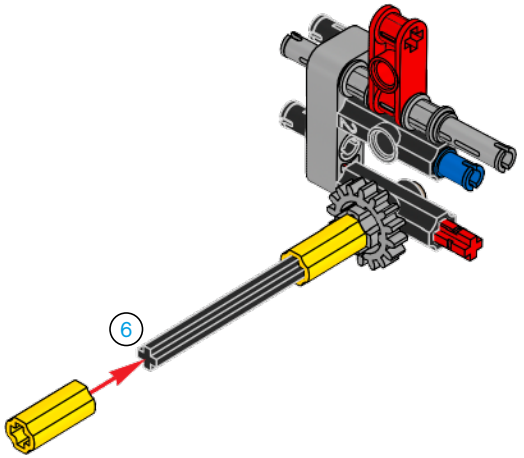

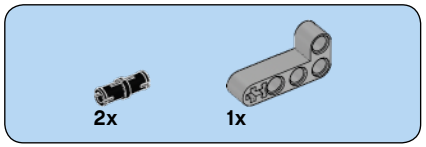

49

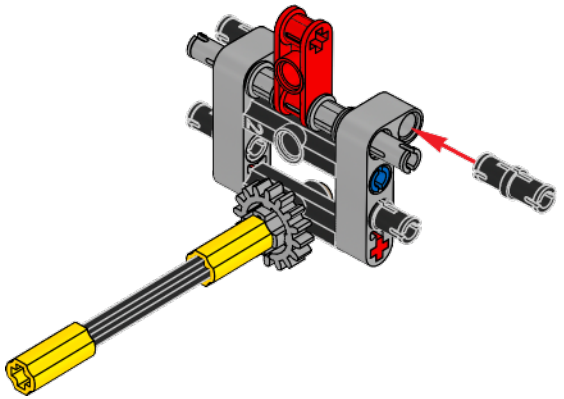

50

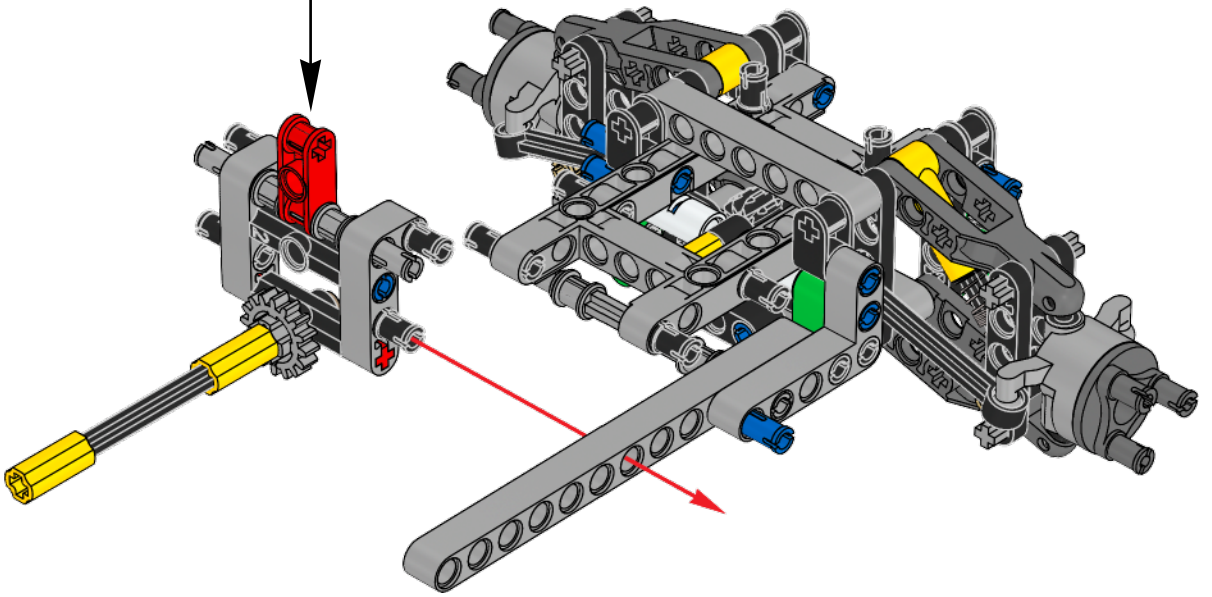

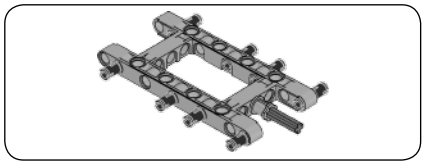

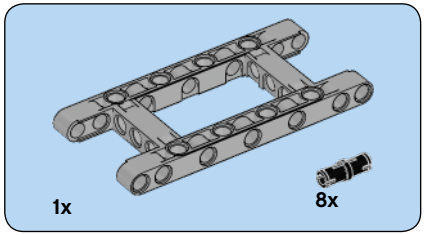

51

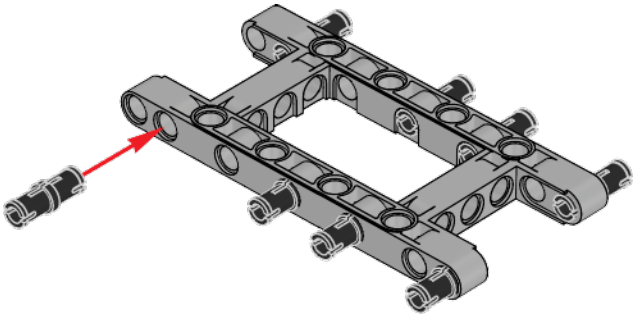

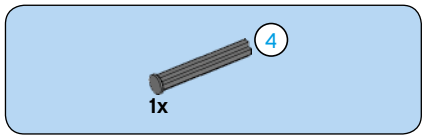

52

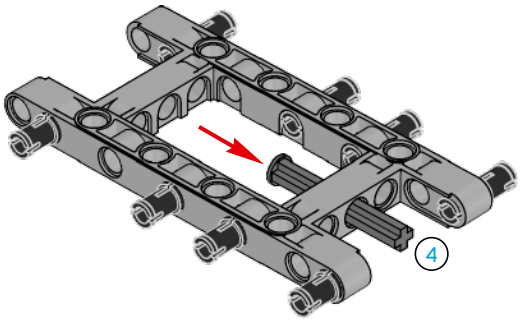

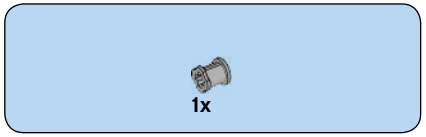

53

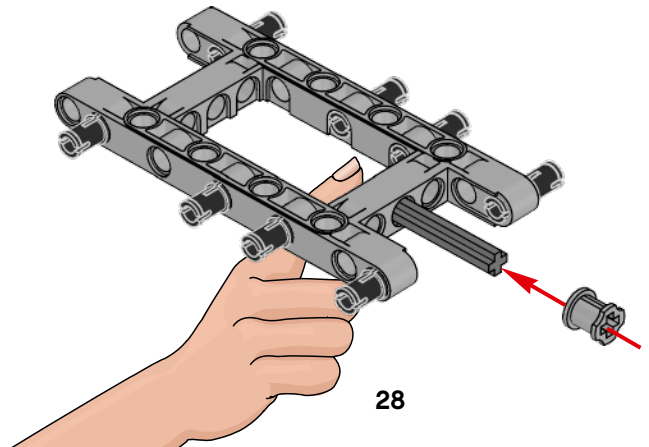

54

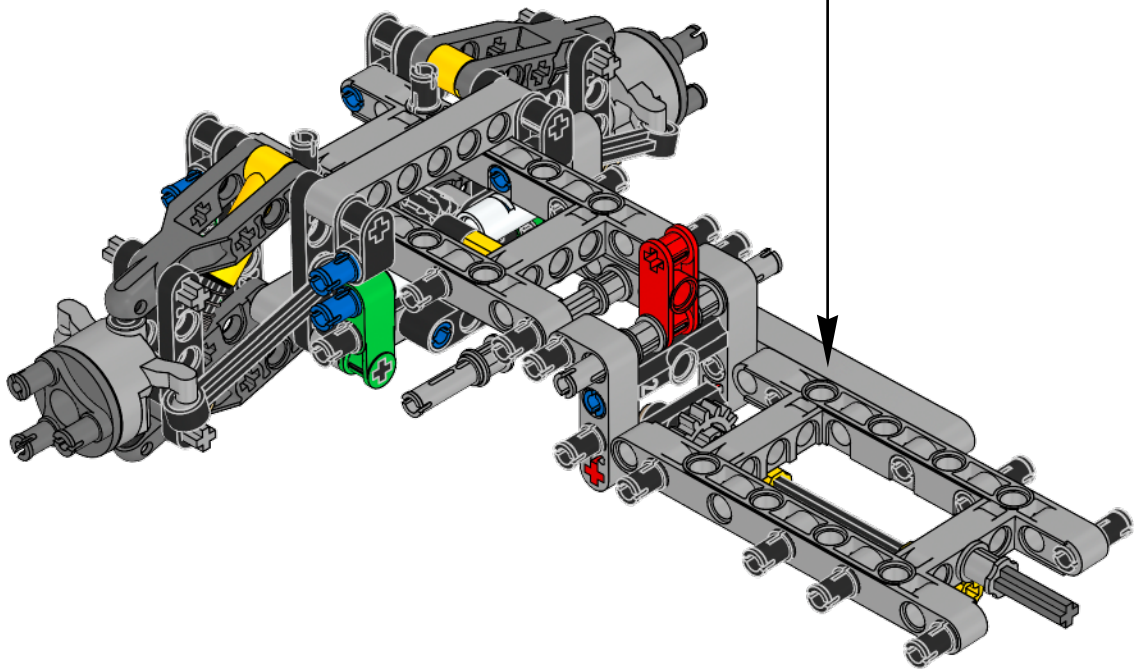

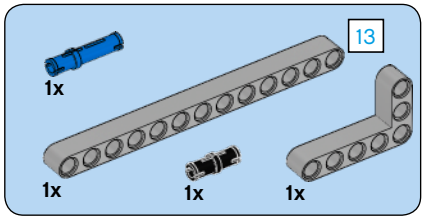

55

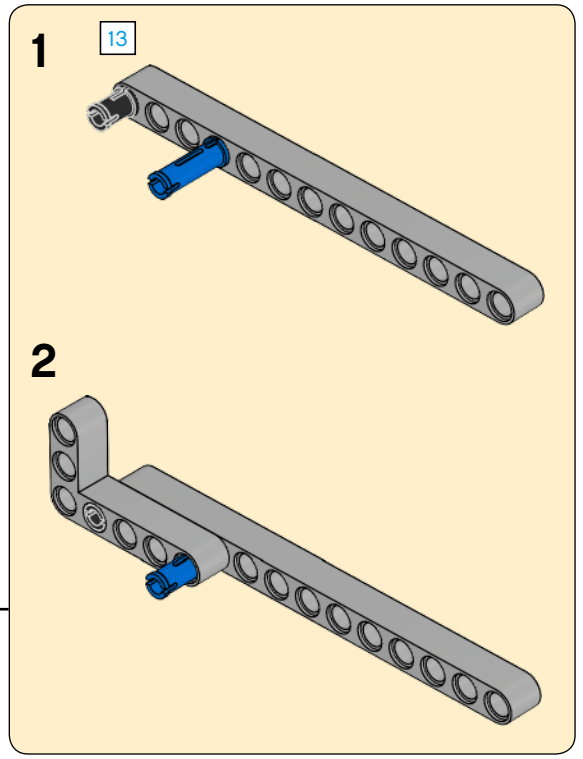

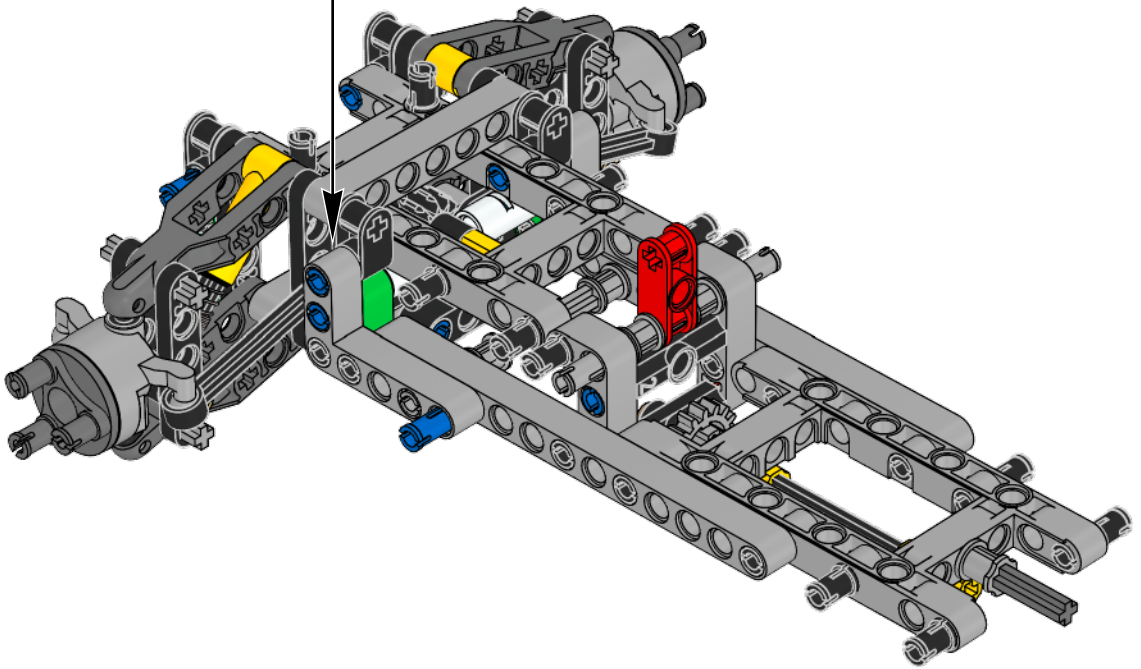

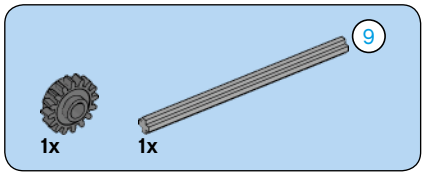

56

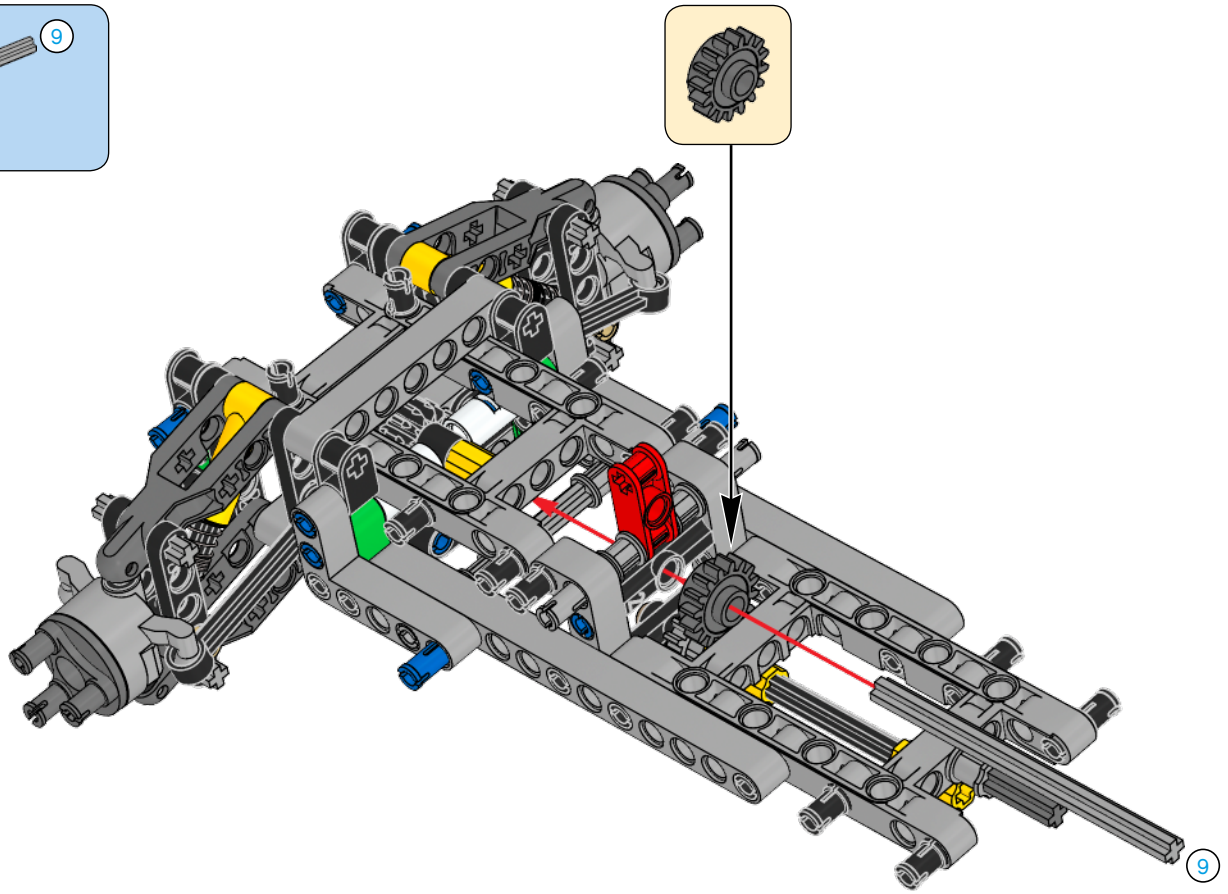

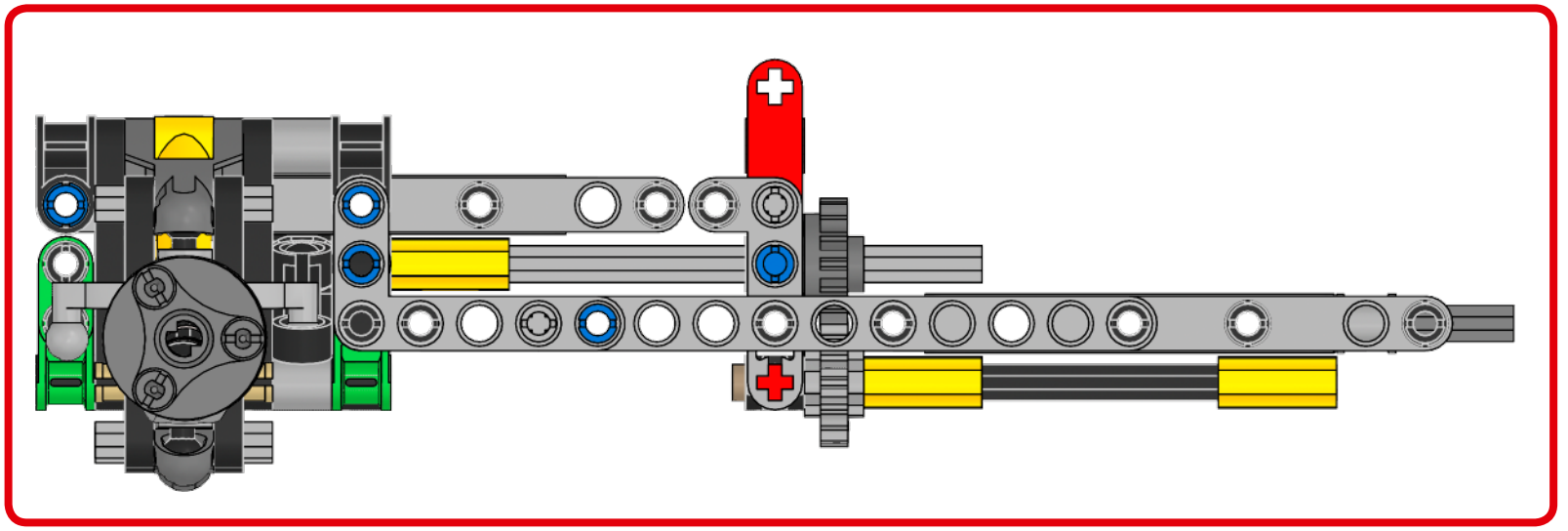

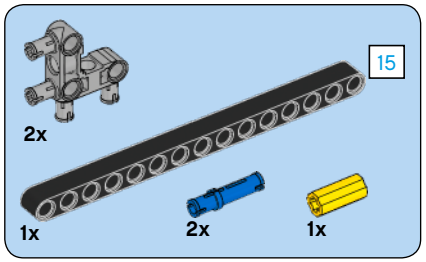

57

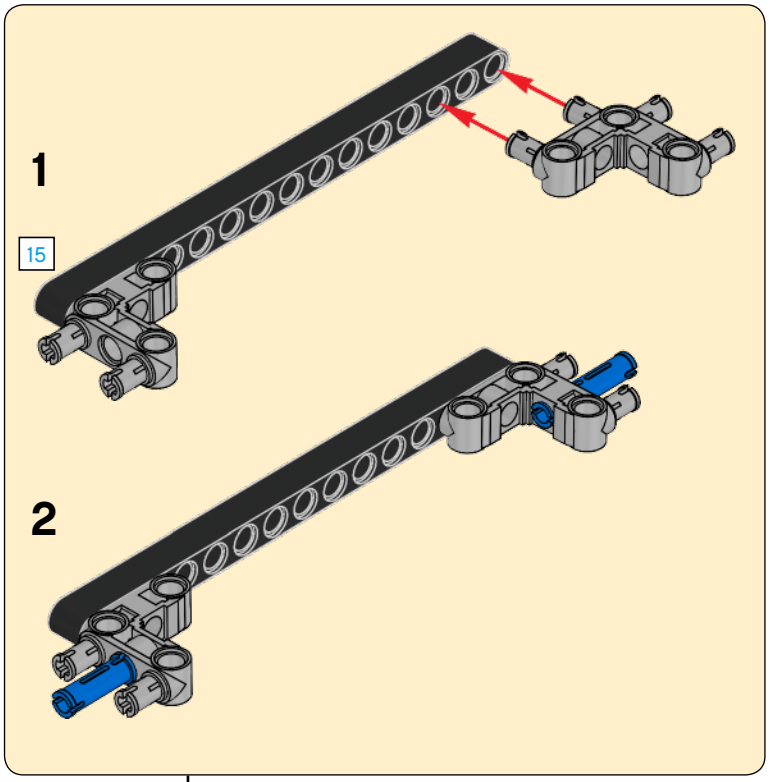

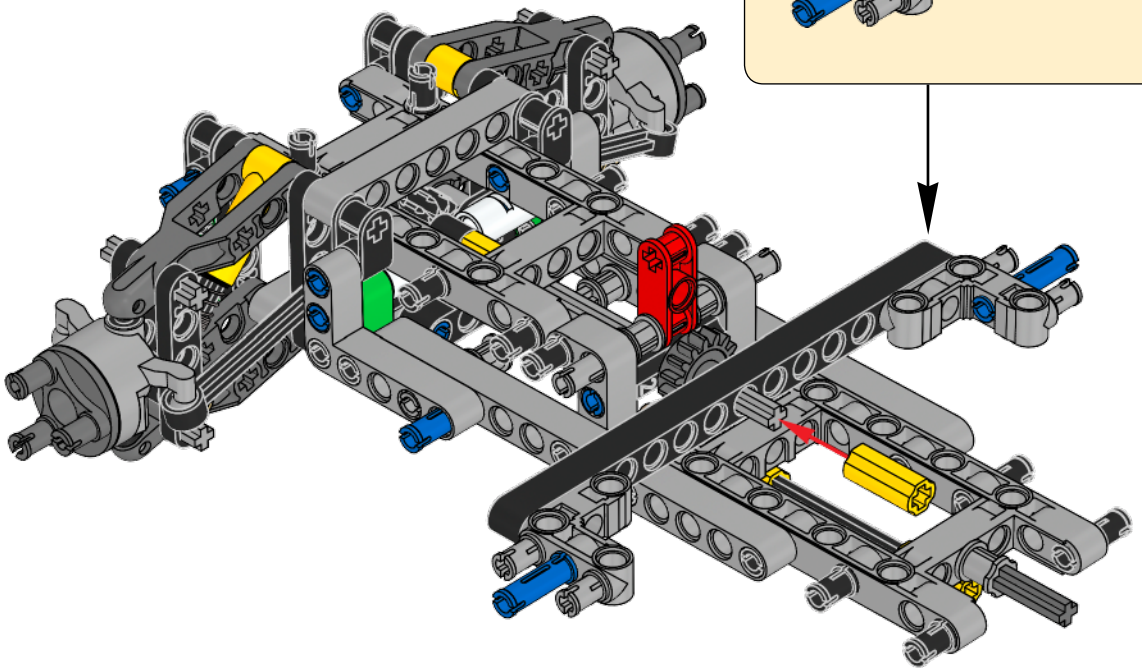

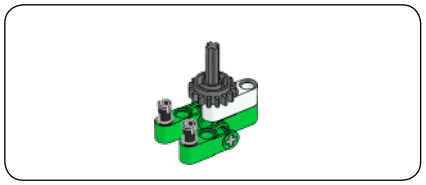

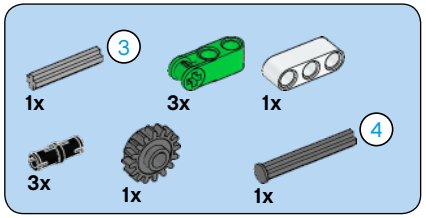

58

1

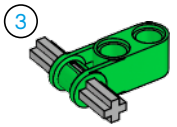

2

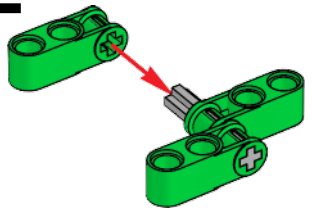

3

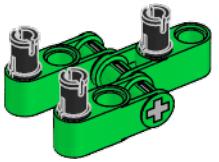

4

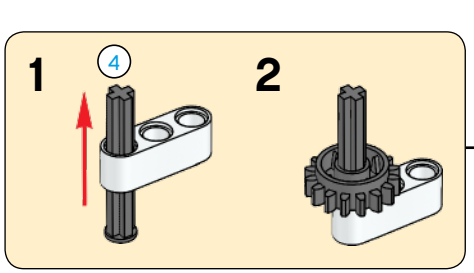

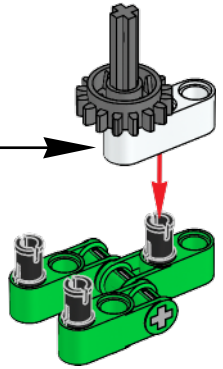

59

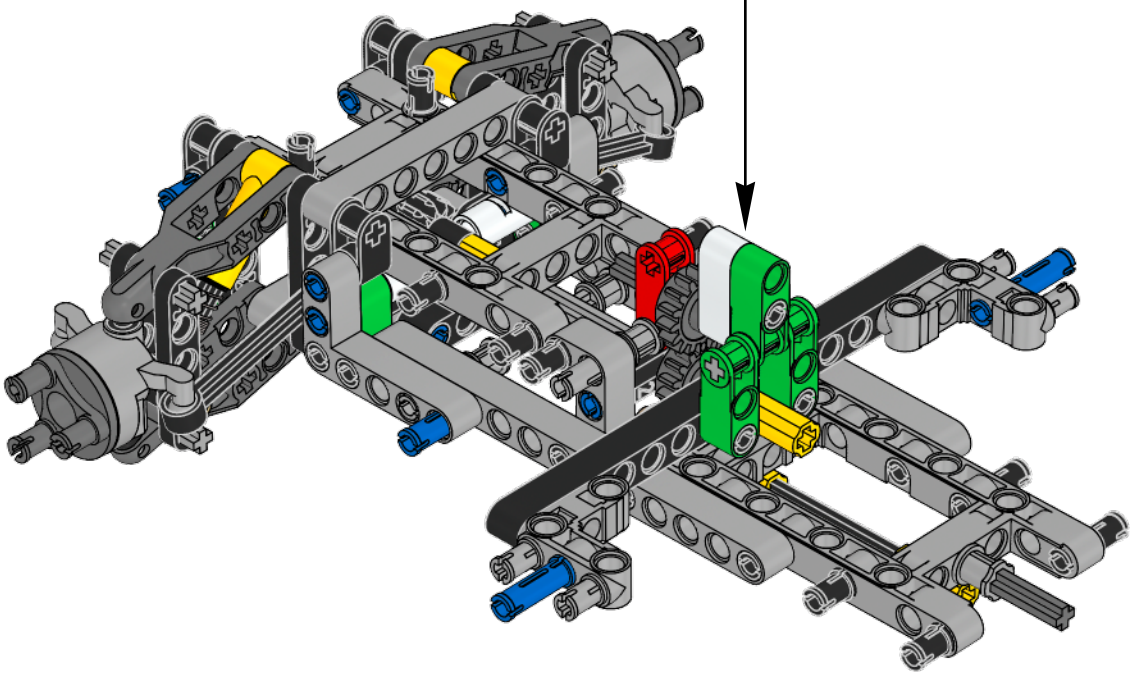

1x

60

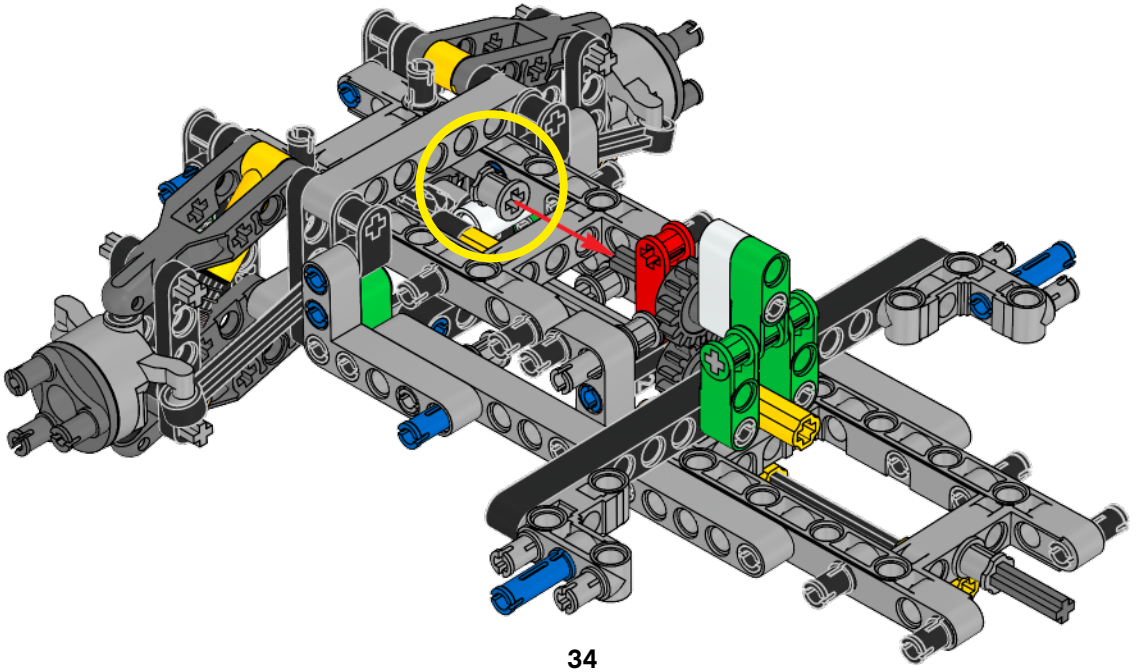

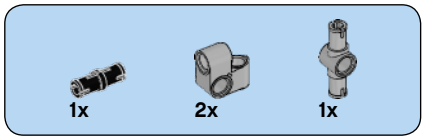

61

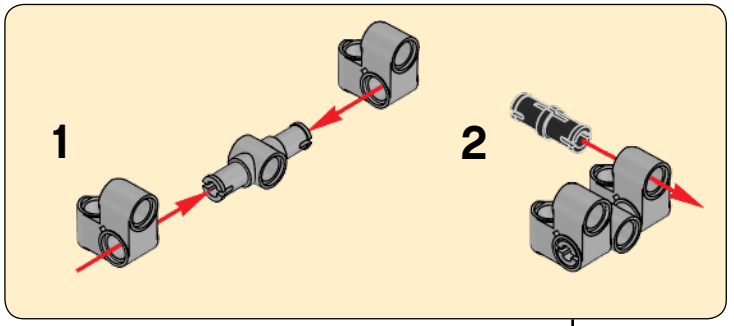

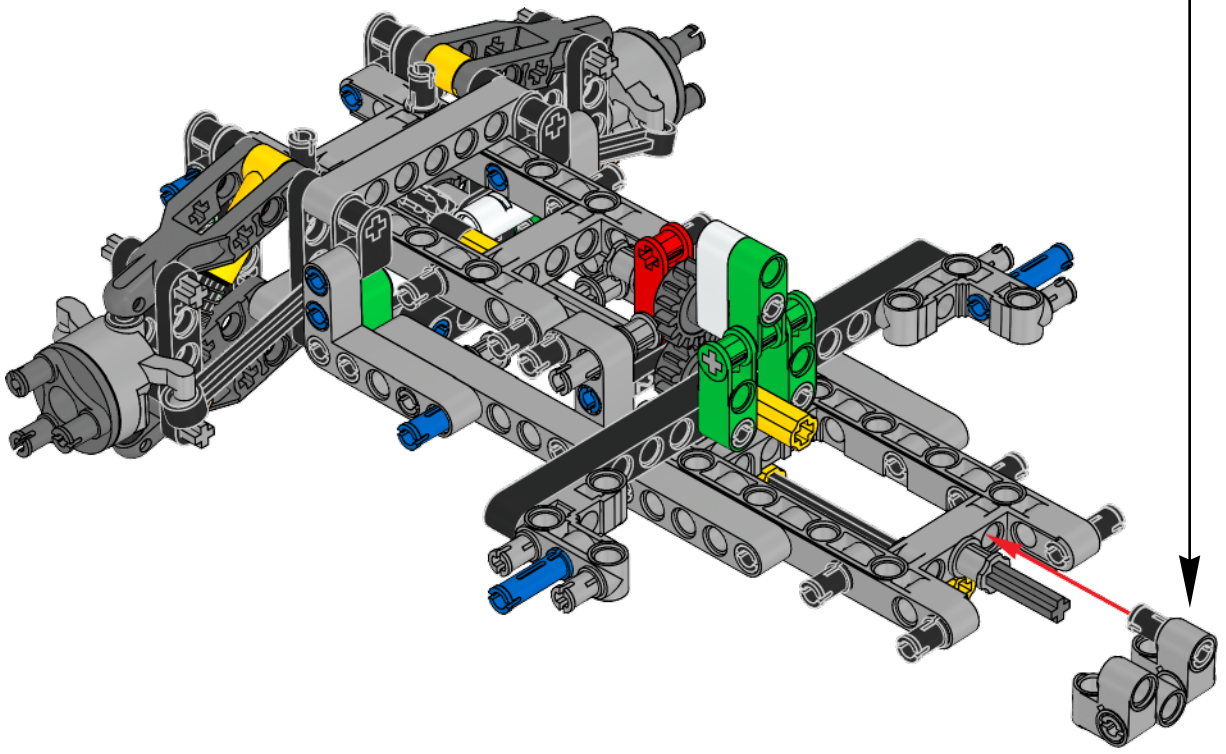

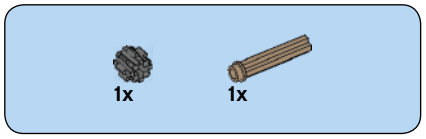

62

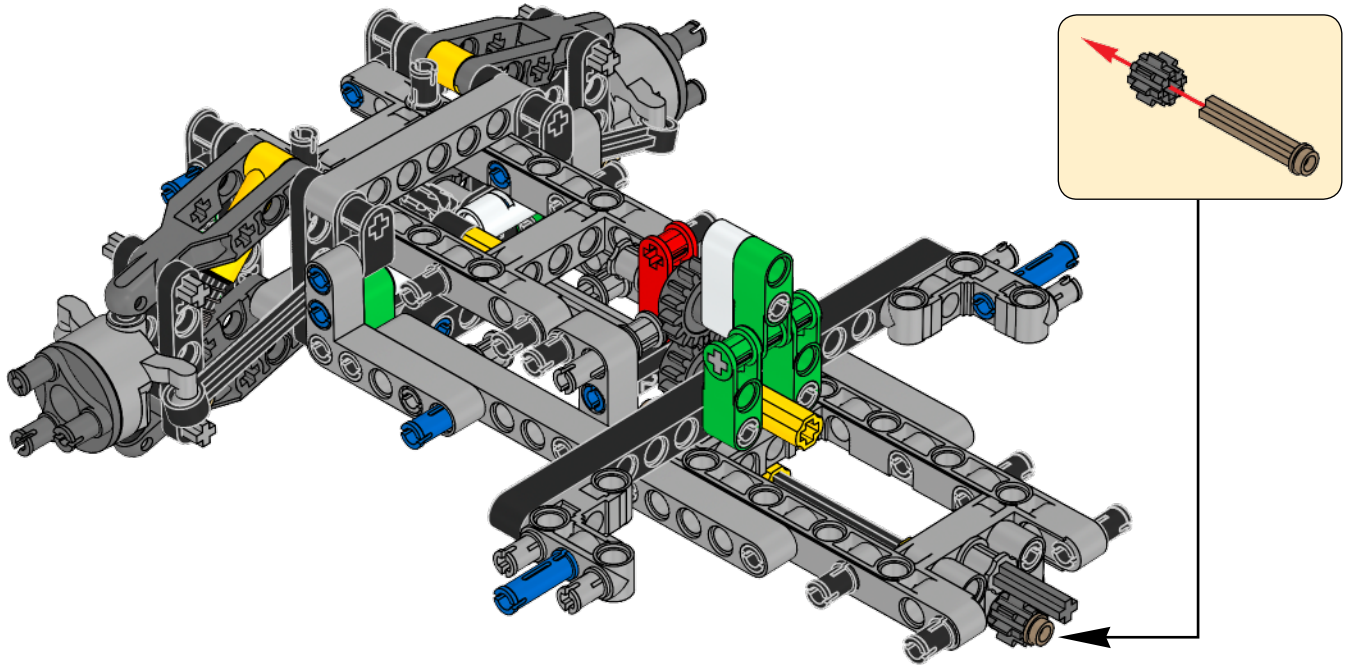

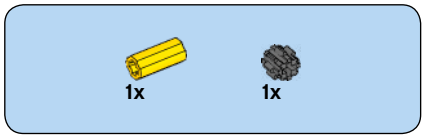

63

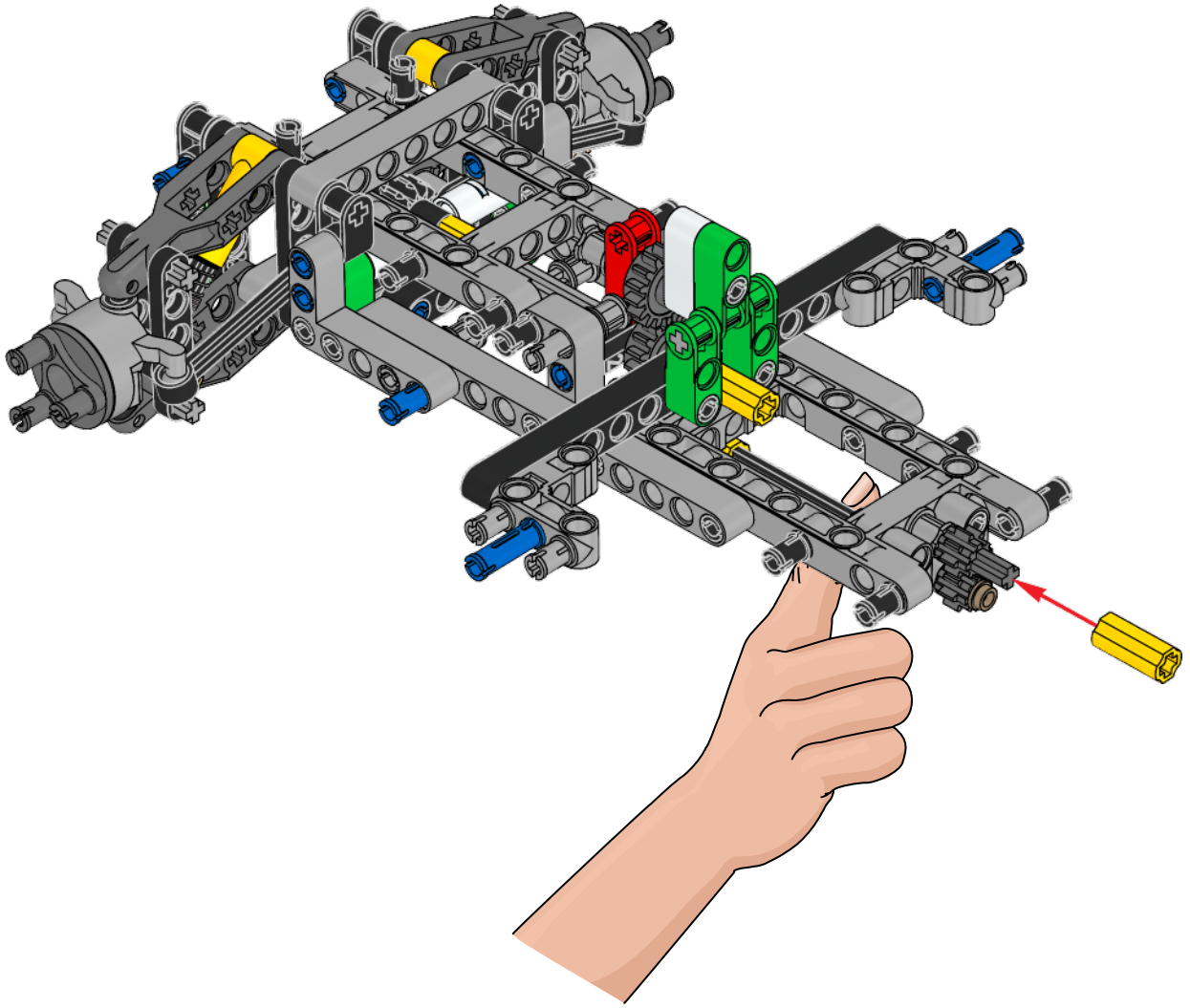

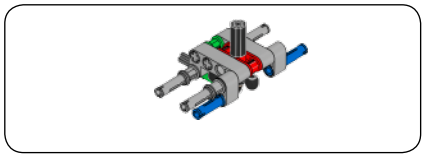

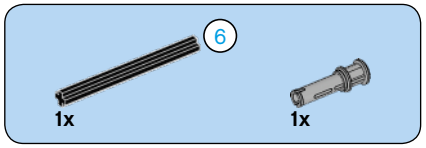

64

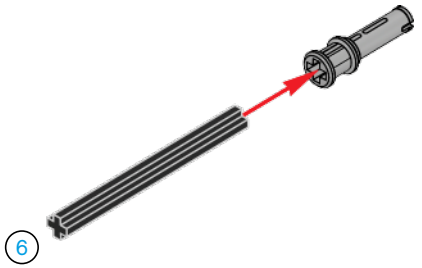

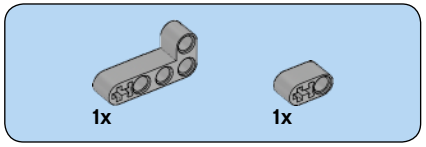

65

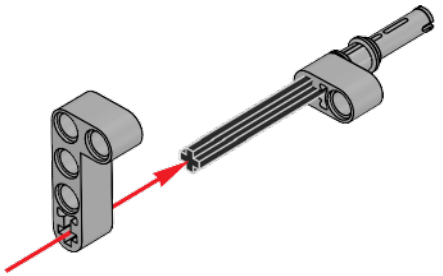

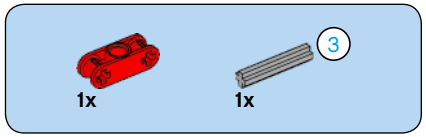

66

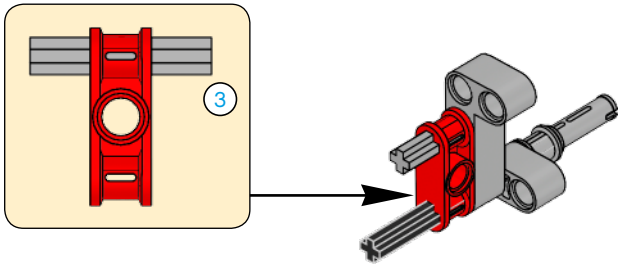

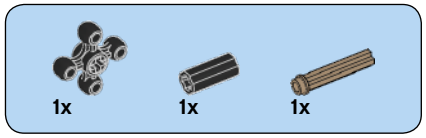

67

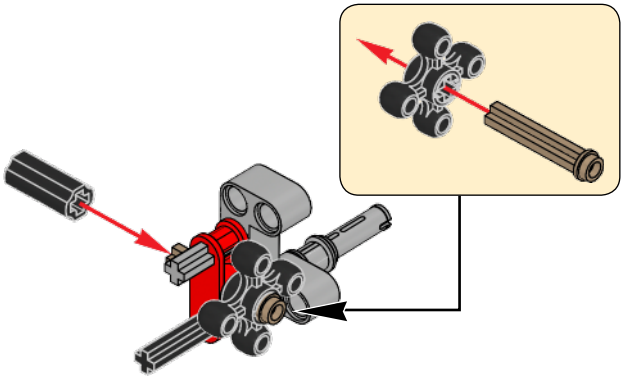

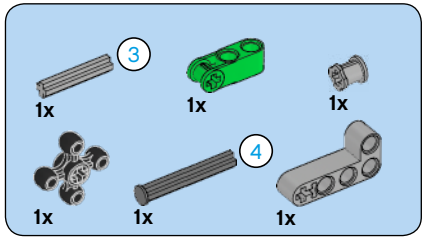

68

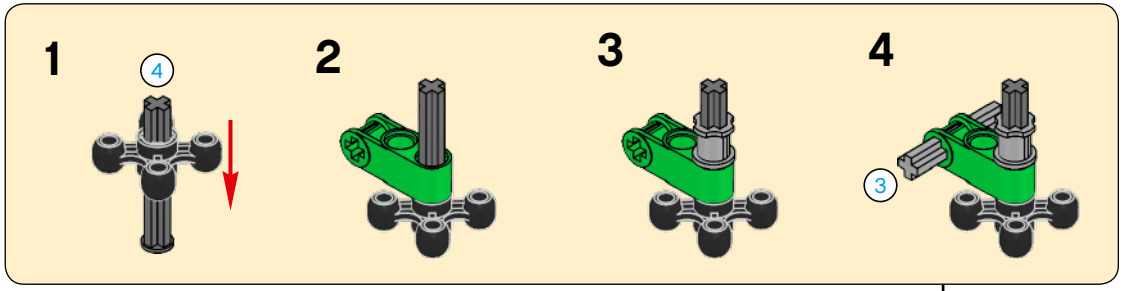

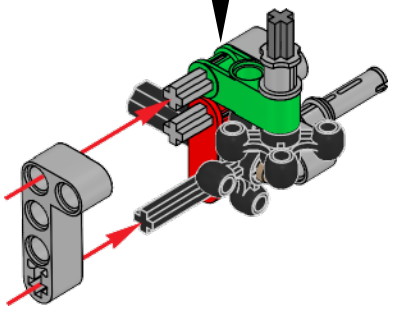

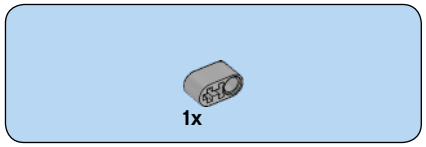

79

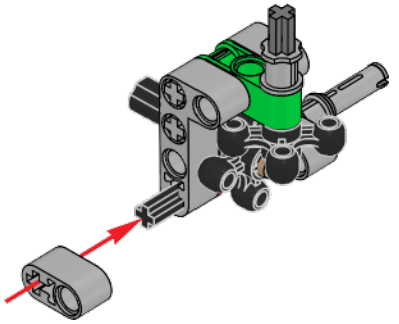

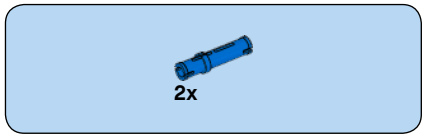

70

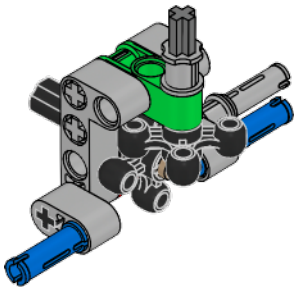

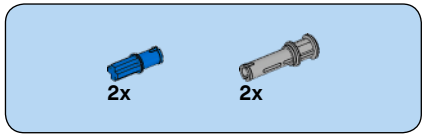

71

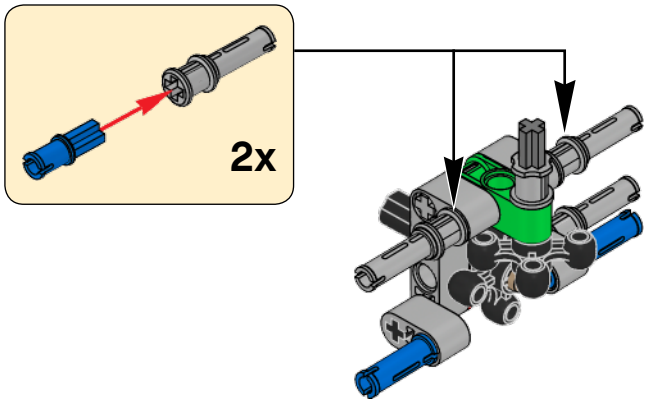

72

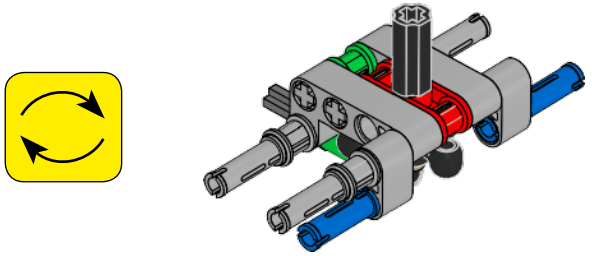

73

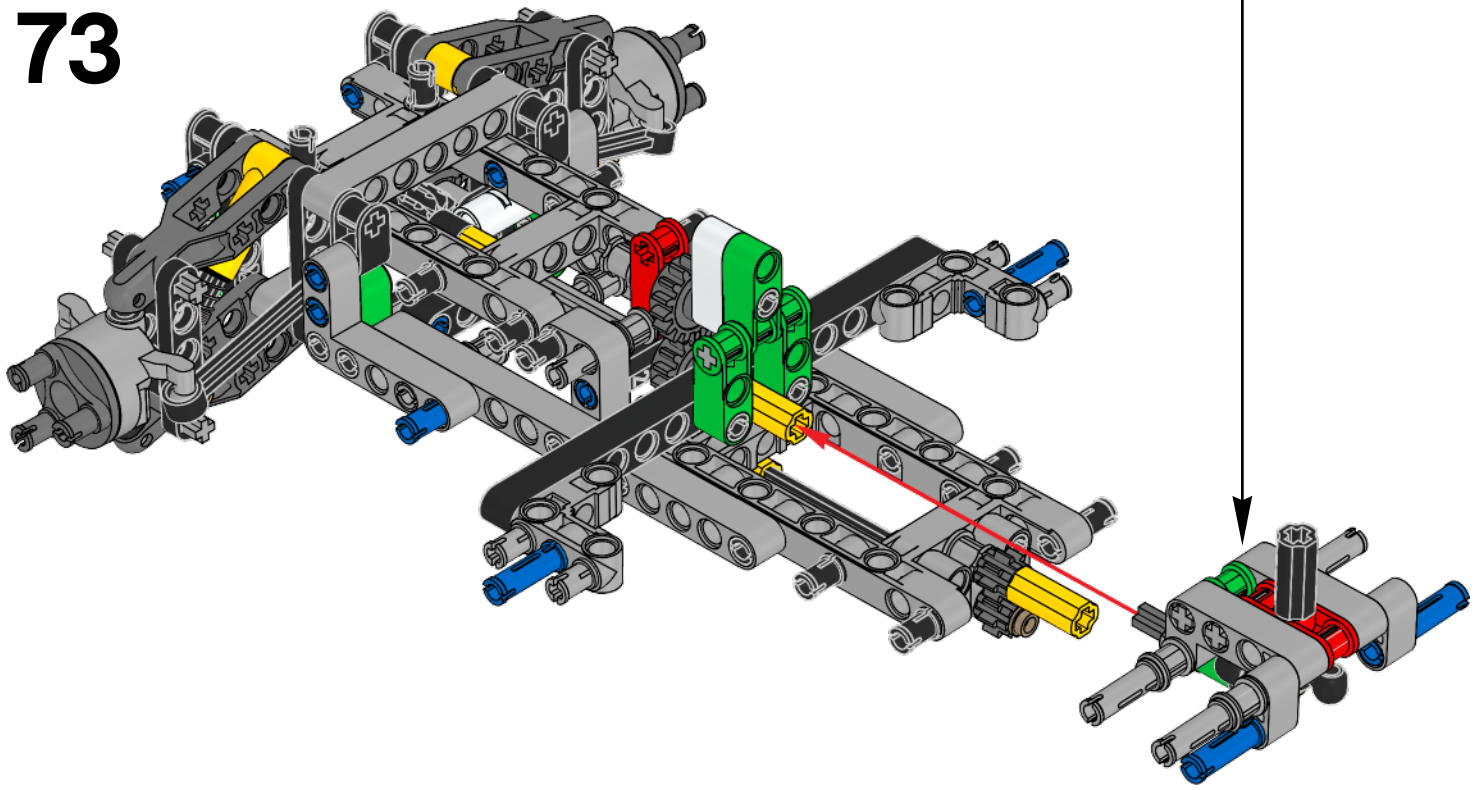

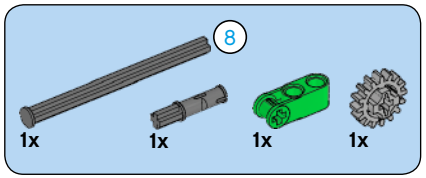

74

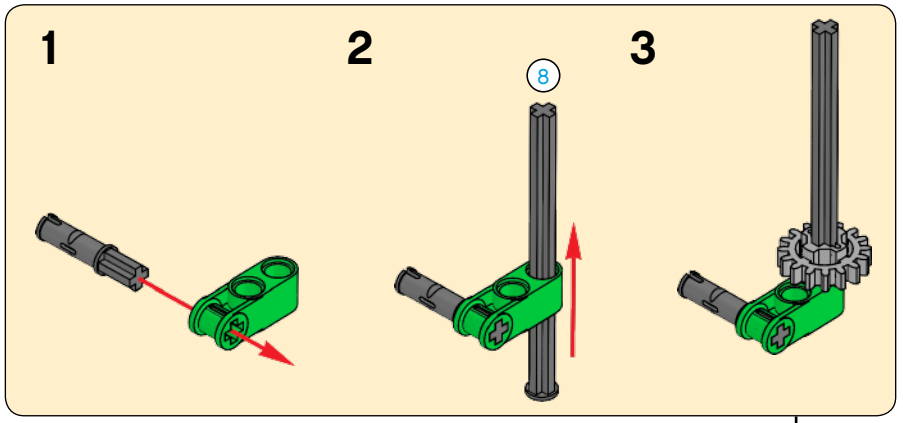

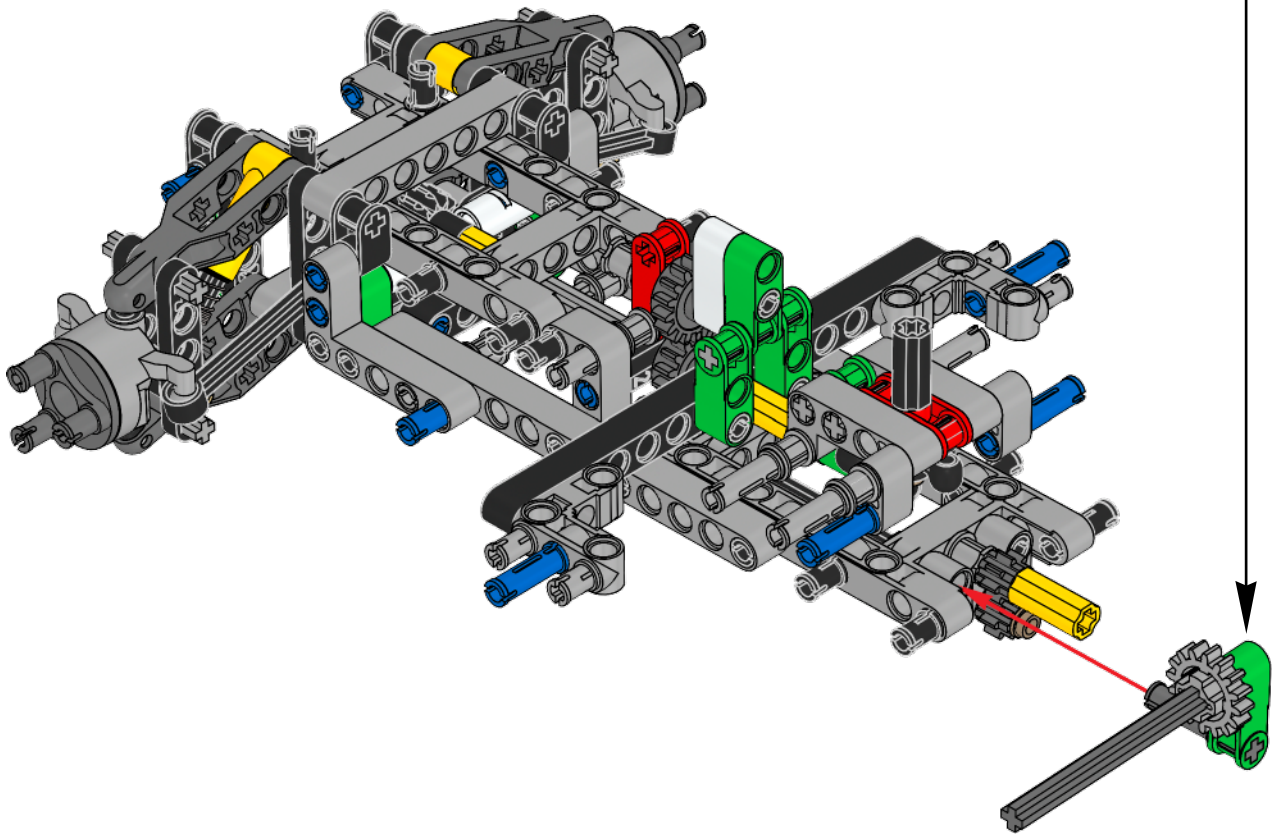

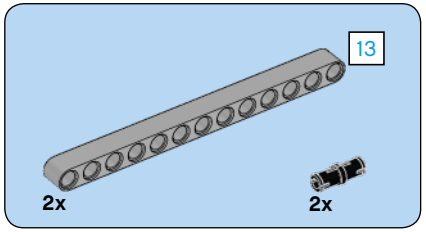

75

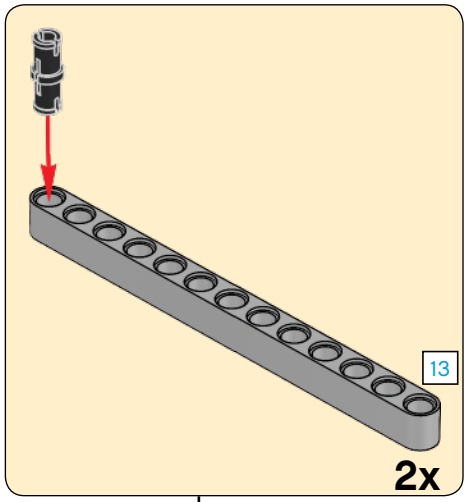

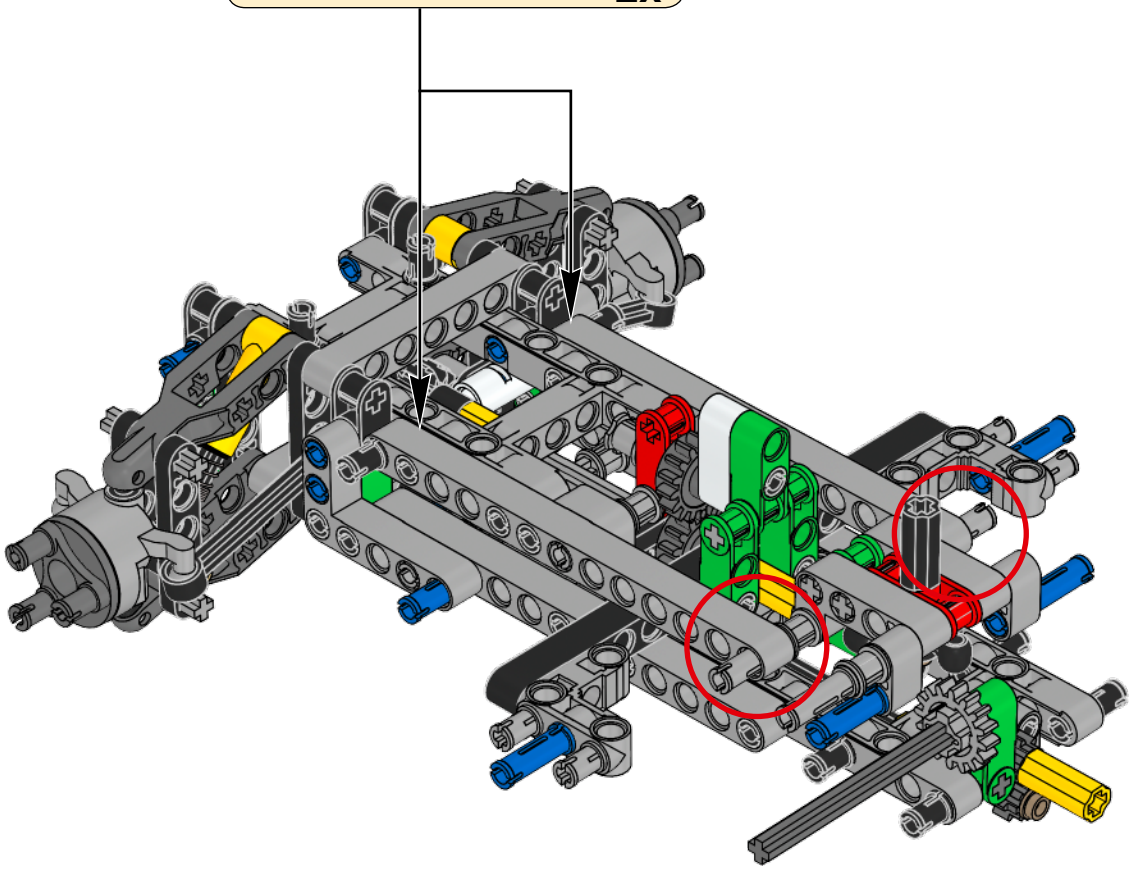

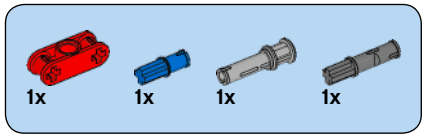

76

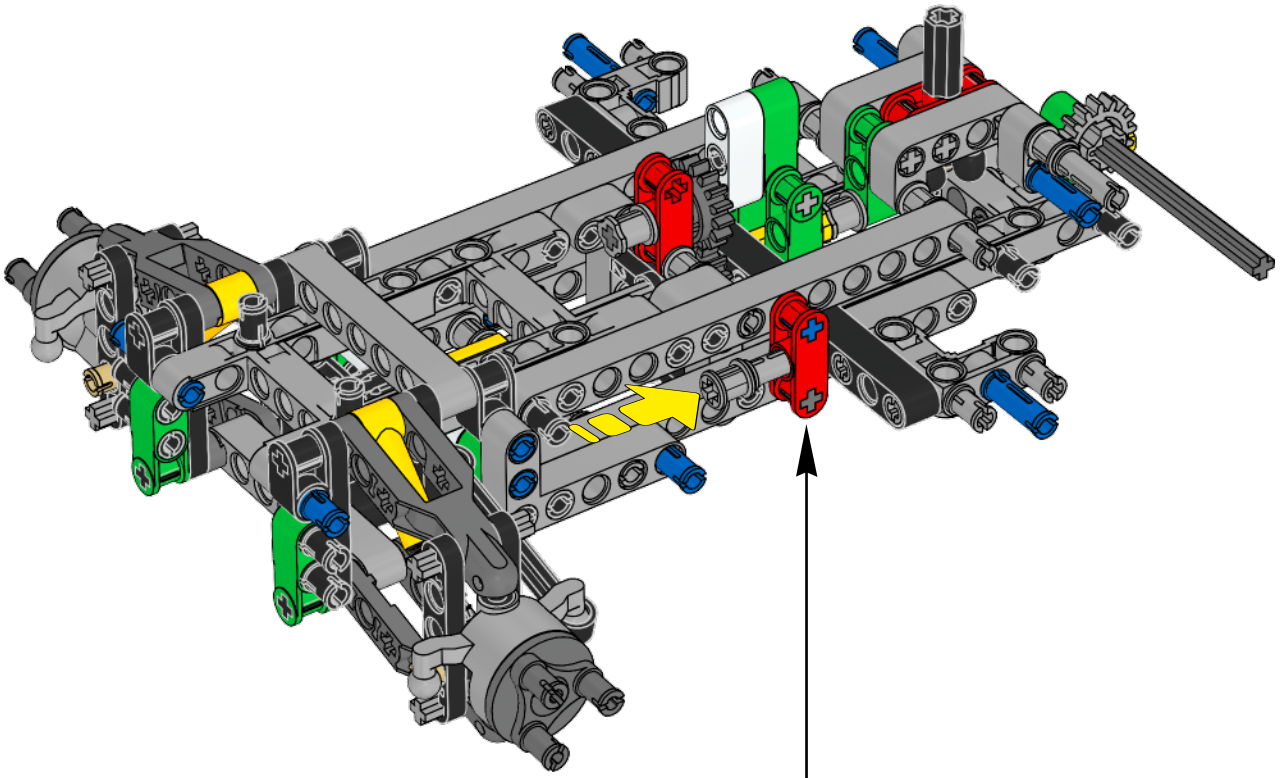

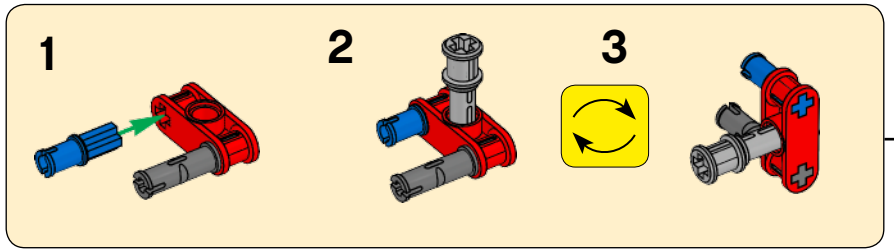

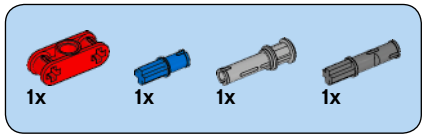

77

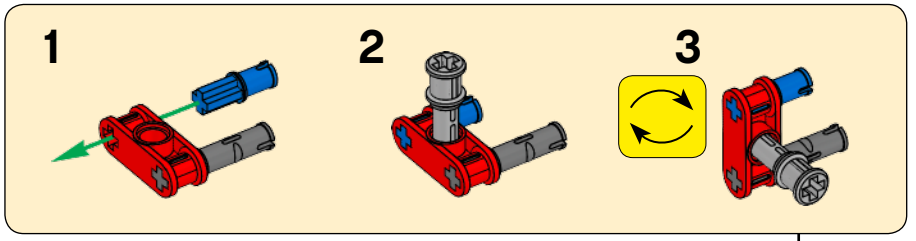

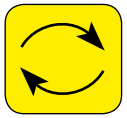

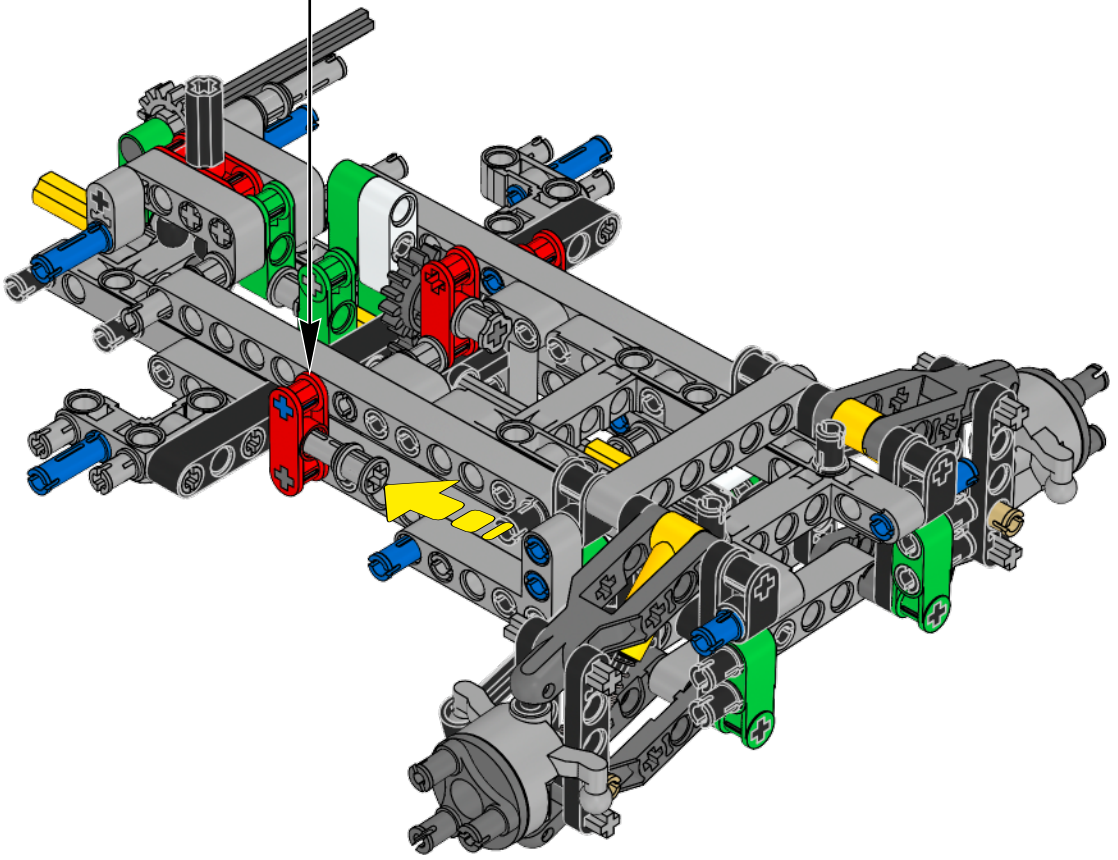

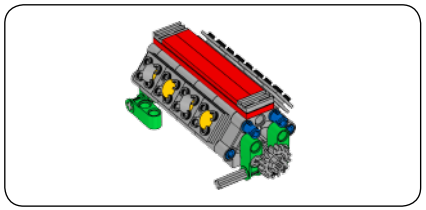

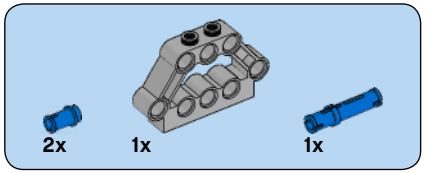

78

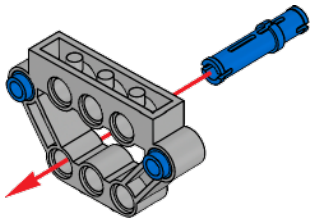

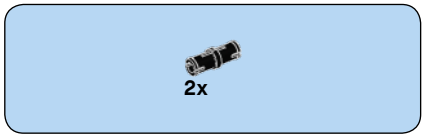

79

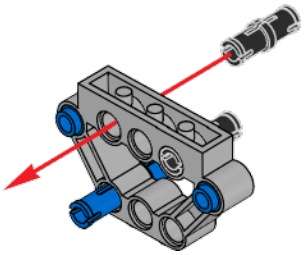

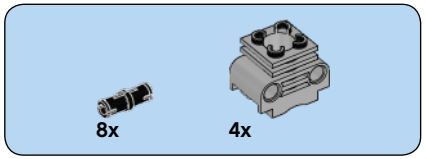

80

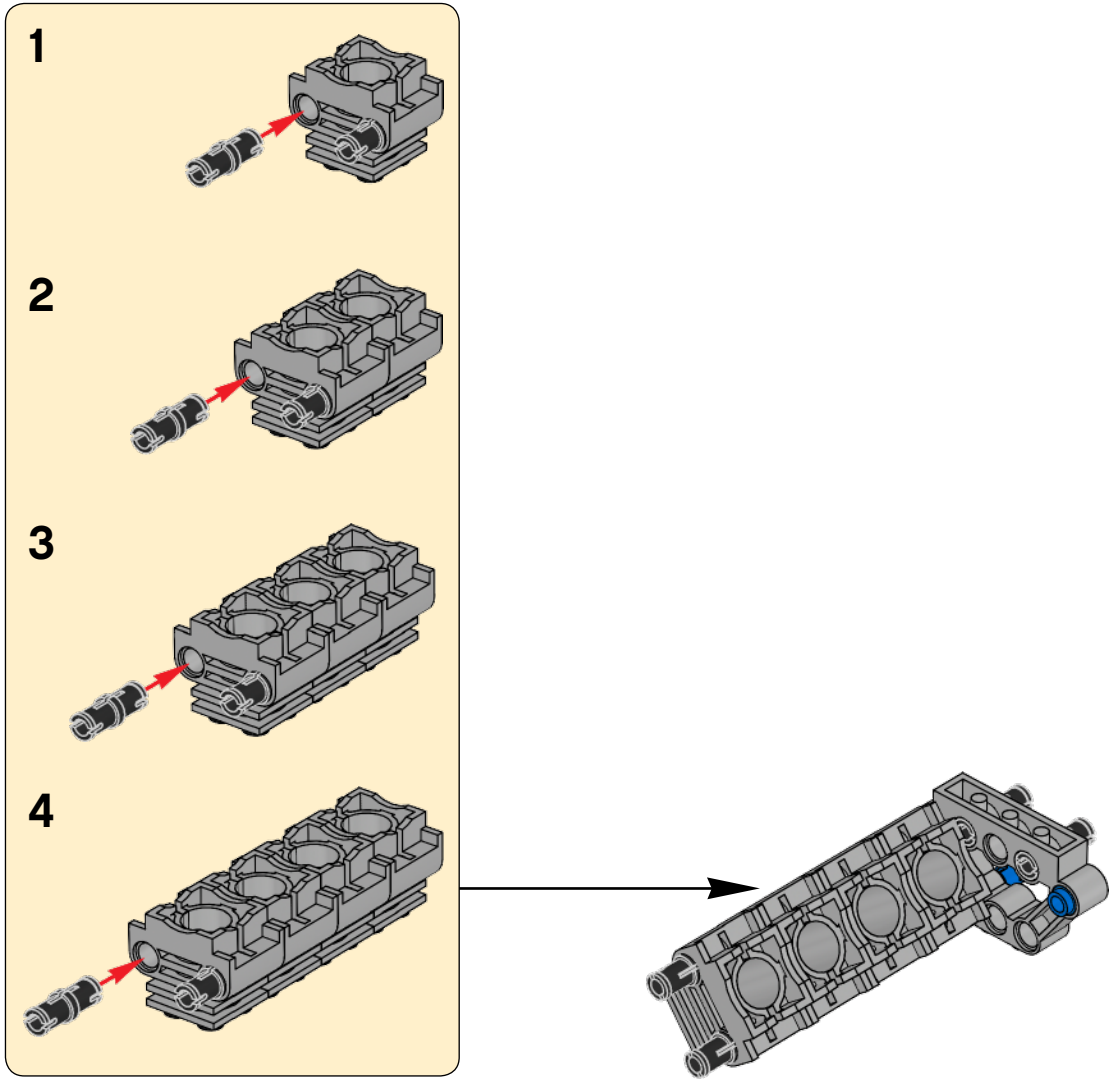

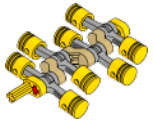

81

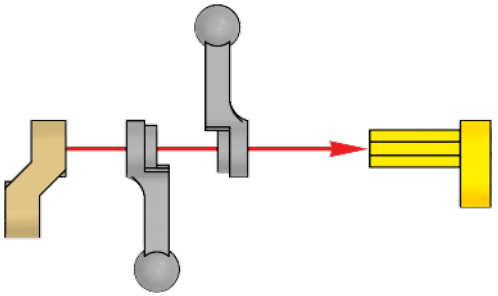

82

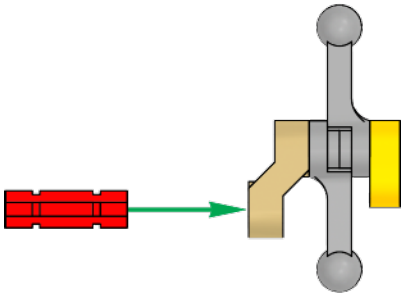

83

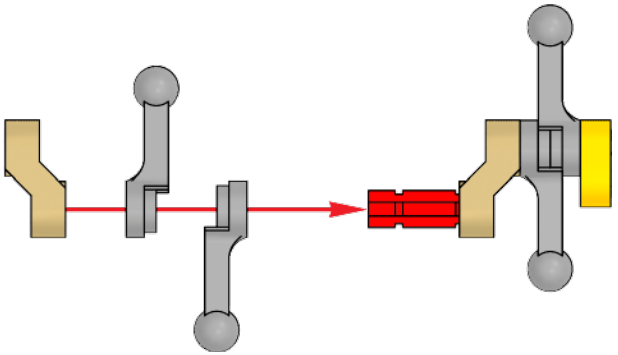

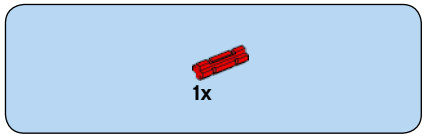

84

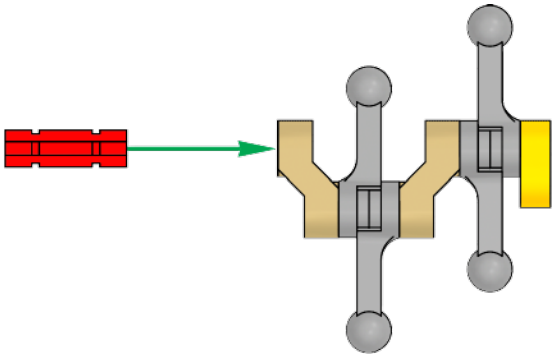

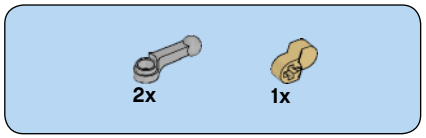

85

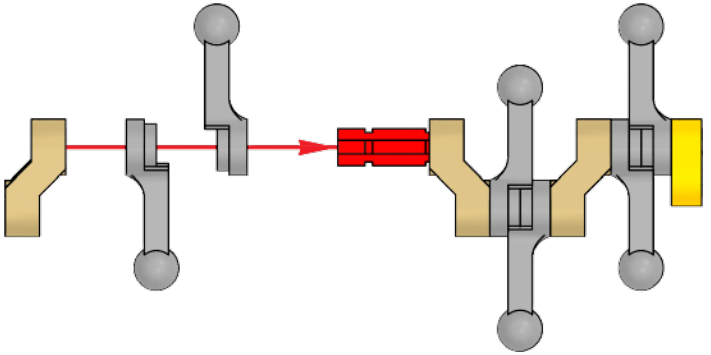

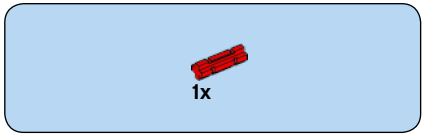

86

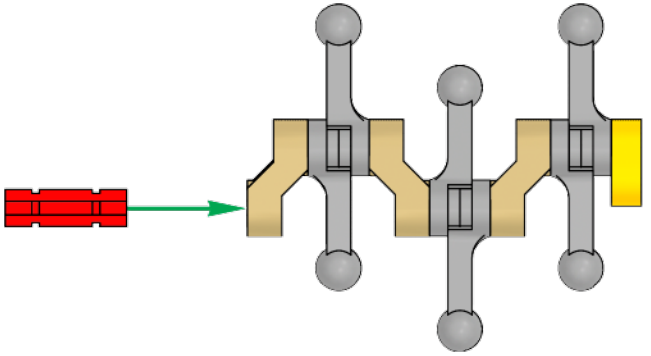

87

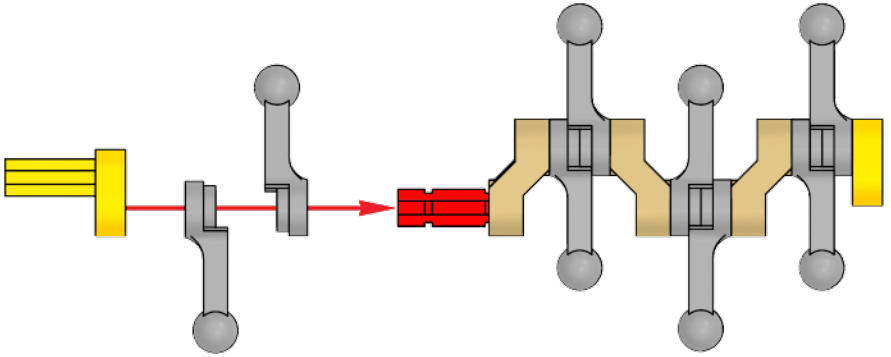

88

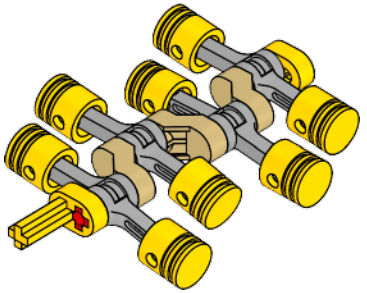

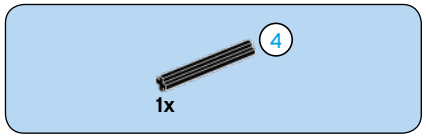

89

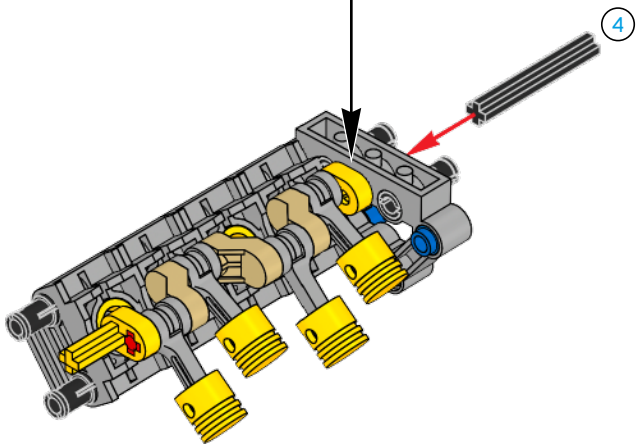

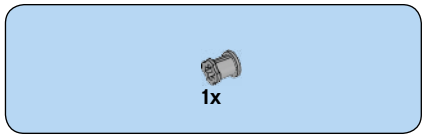

90

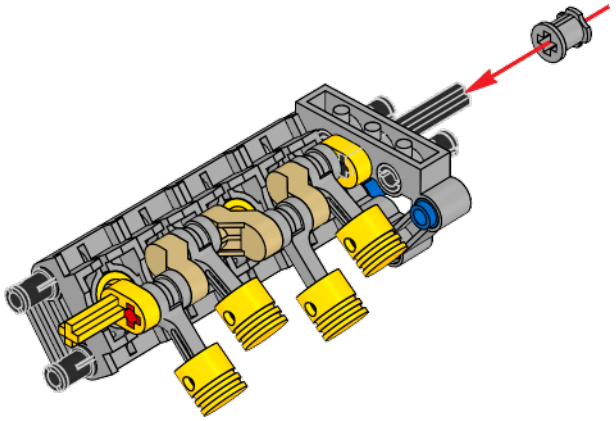

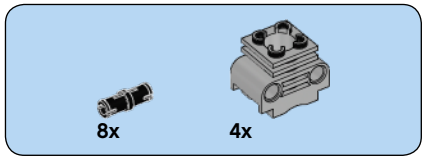

91

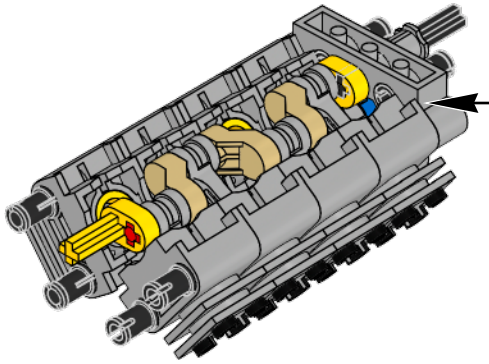

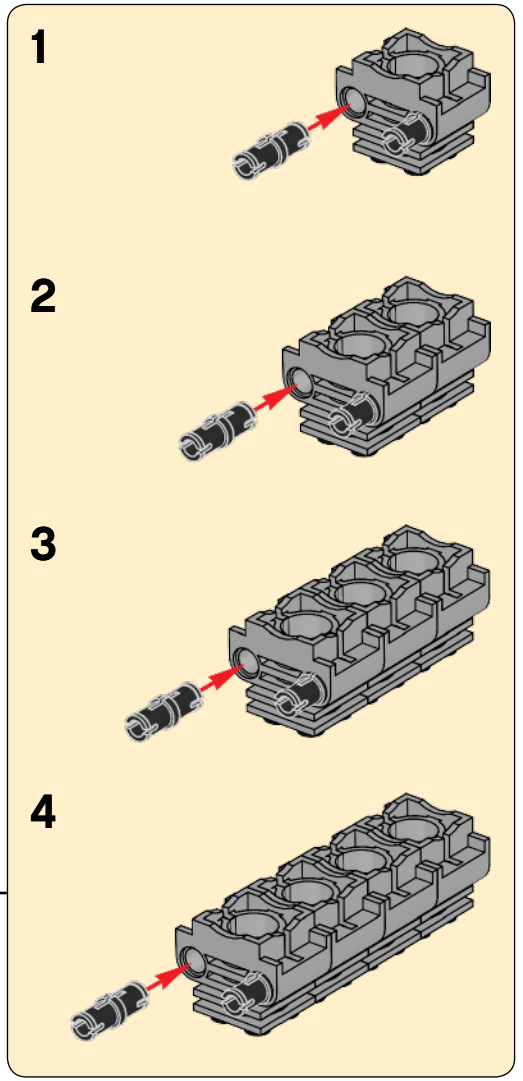

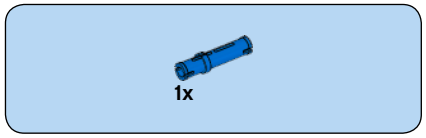

92

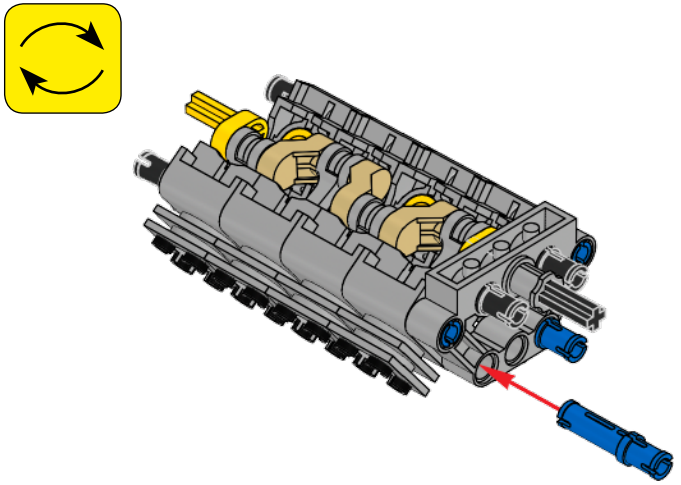

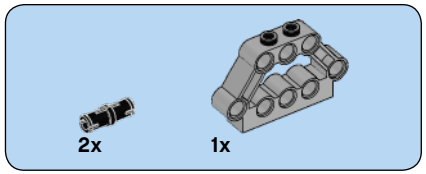

93

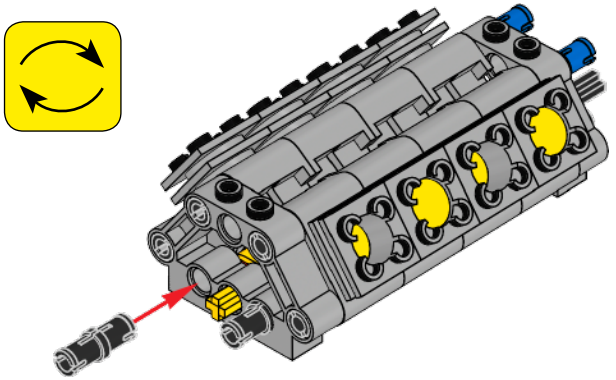

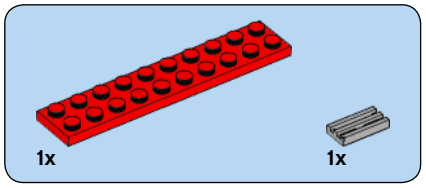

94

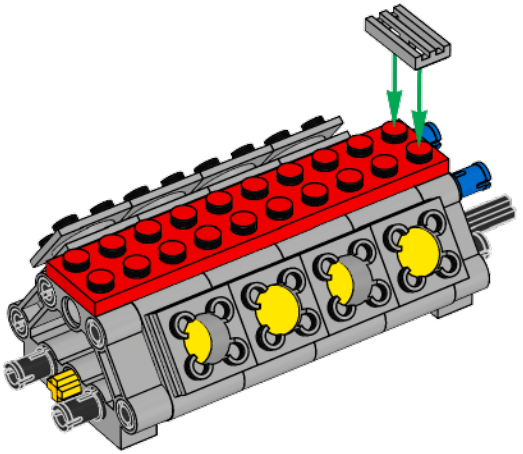

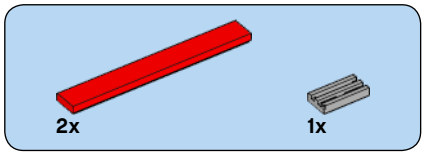

95

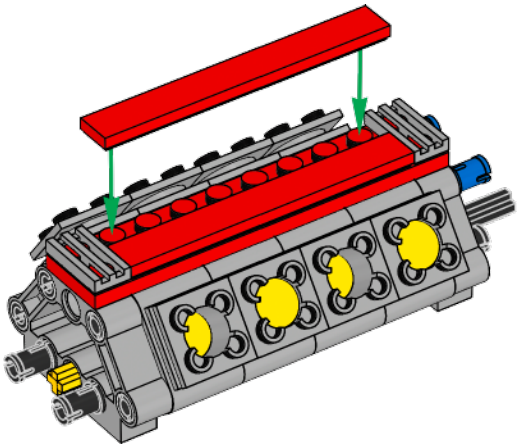

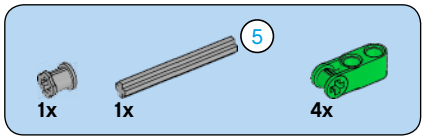

96

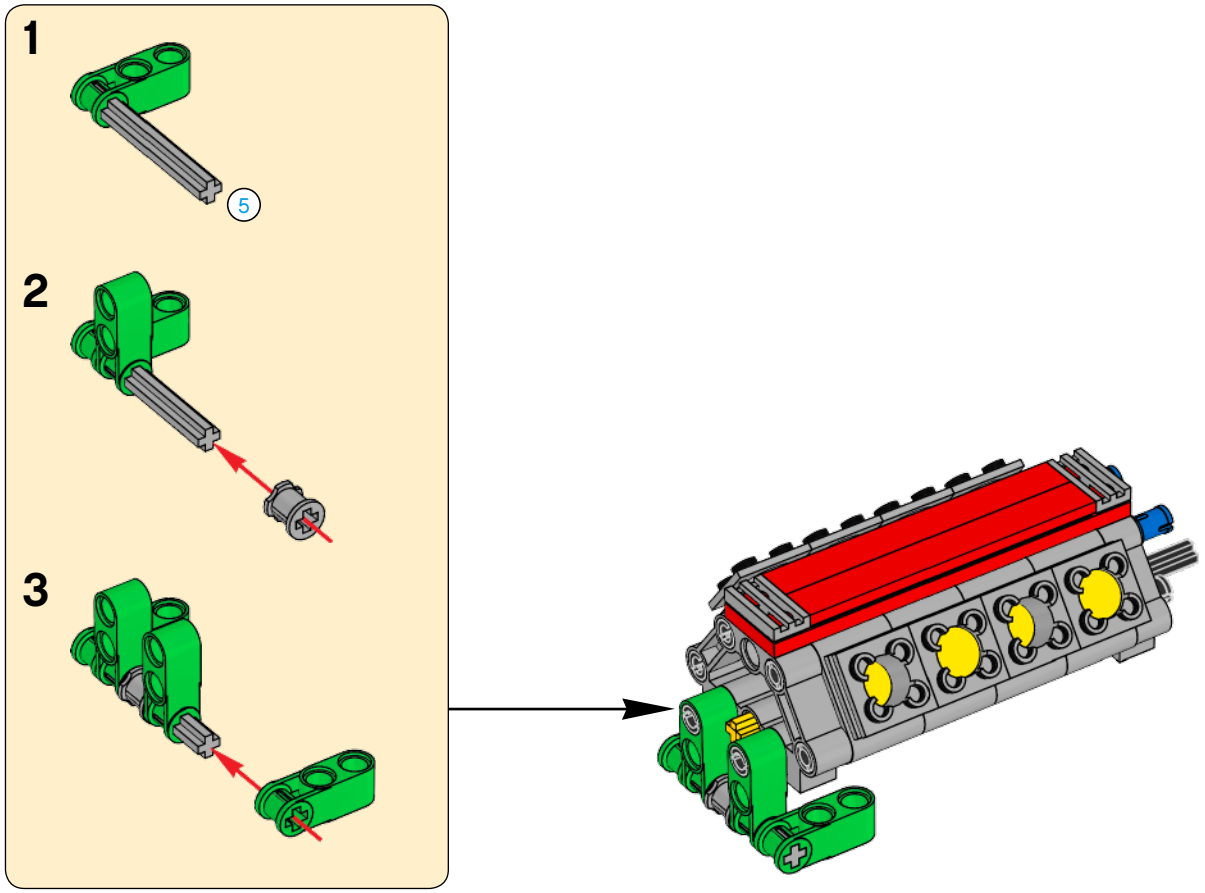

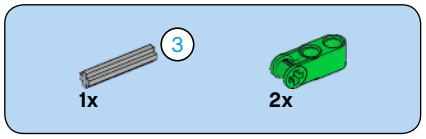

97

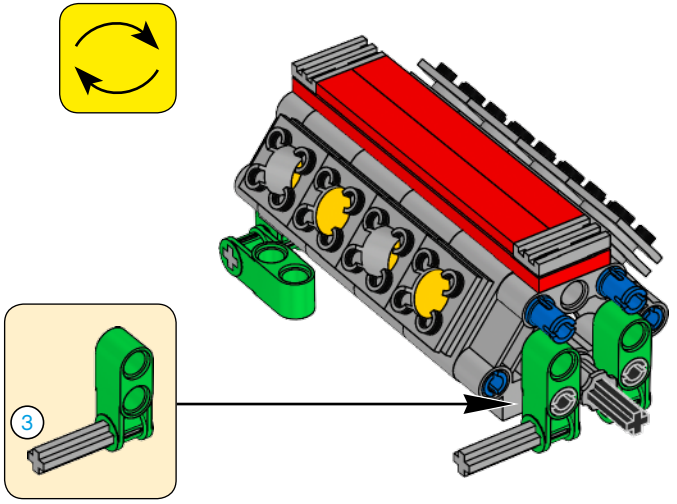

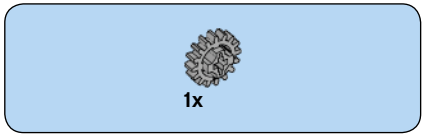

98

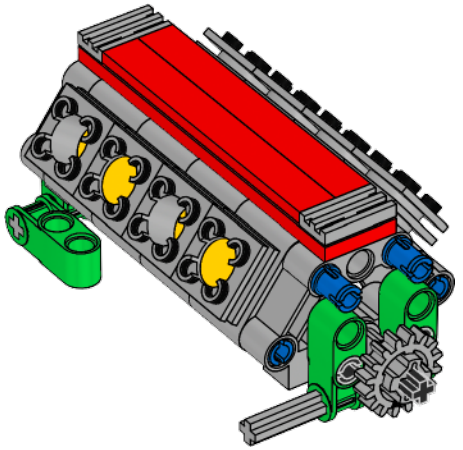

99

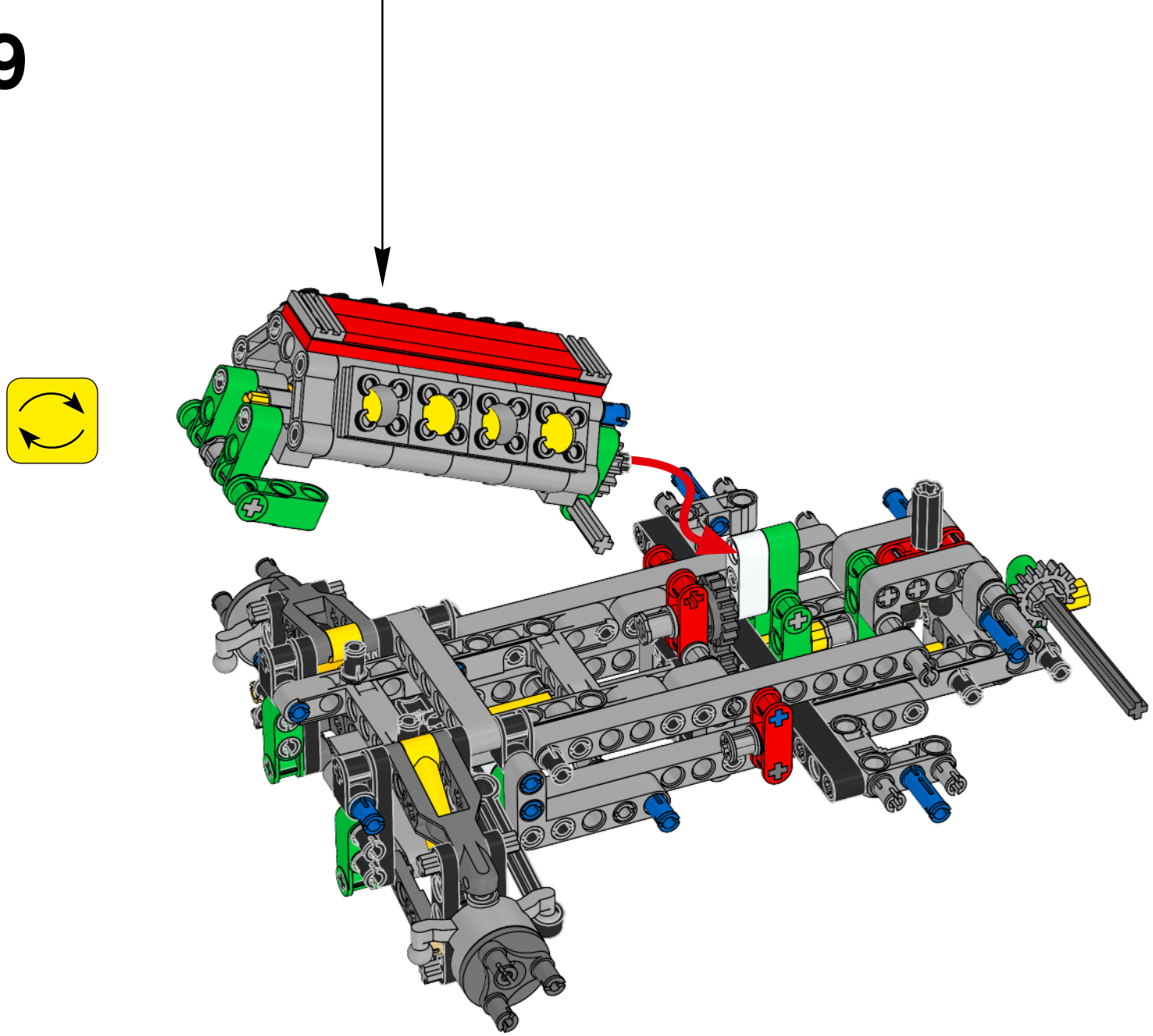

100

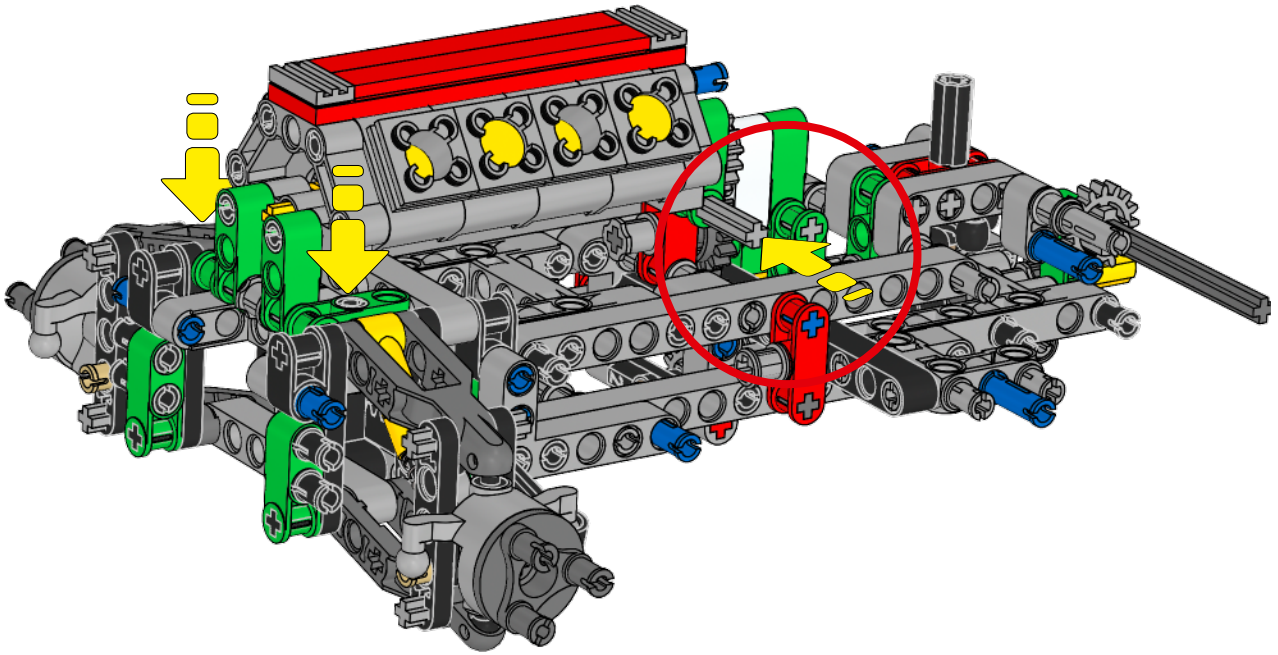

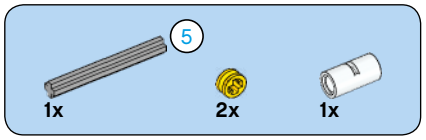

101

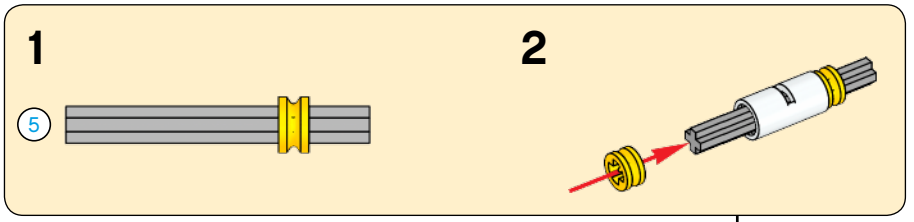

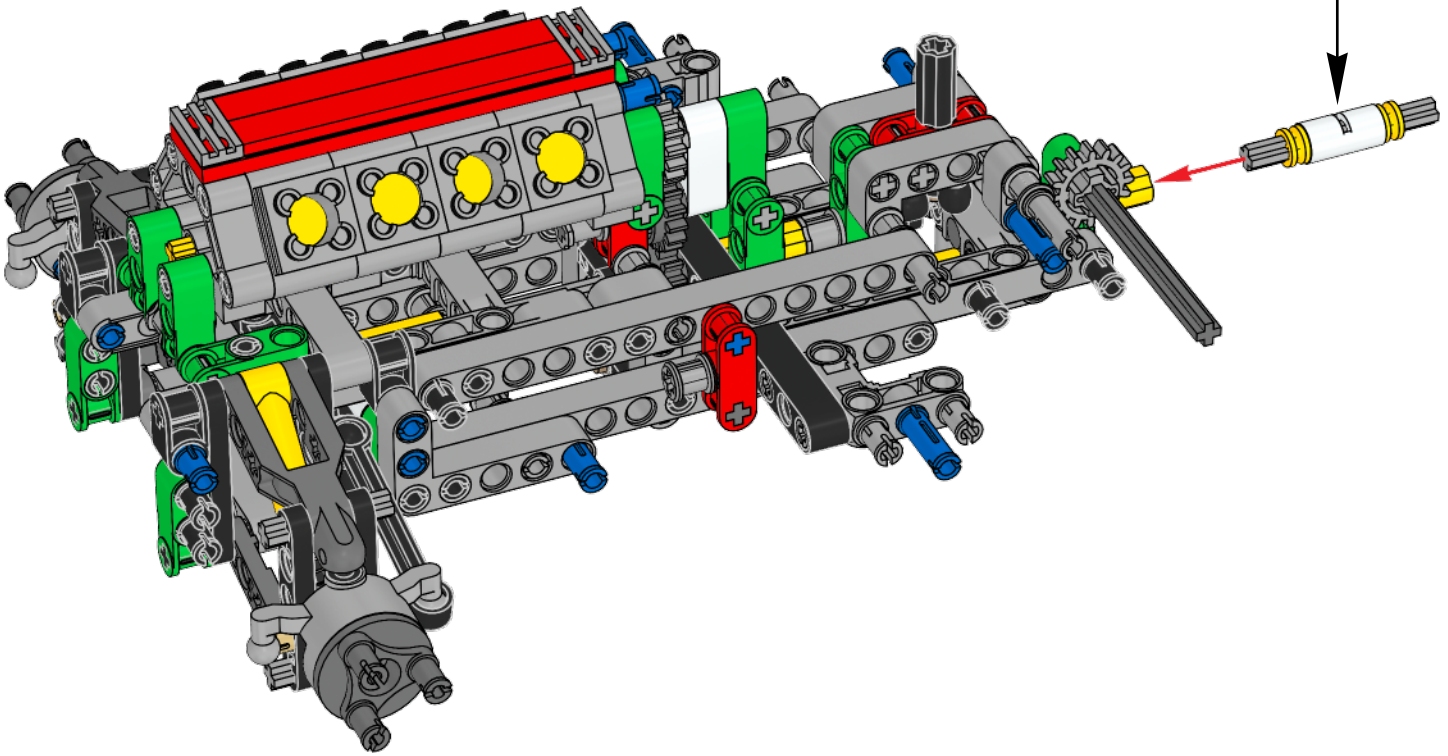

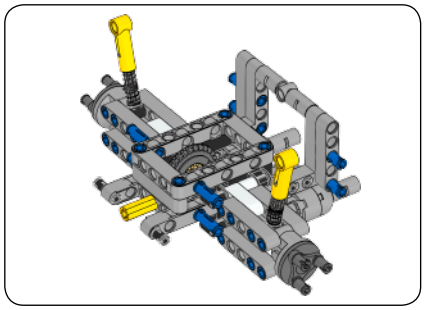

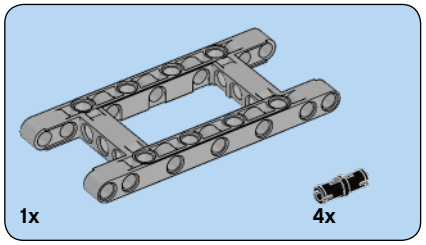

102

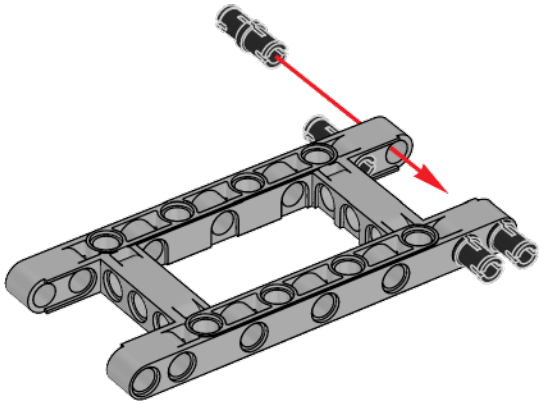

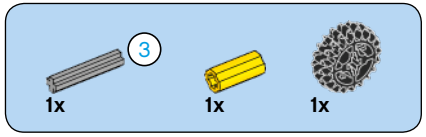

103

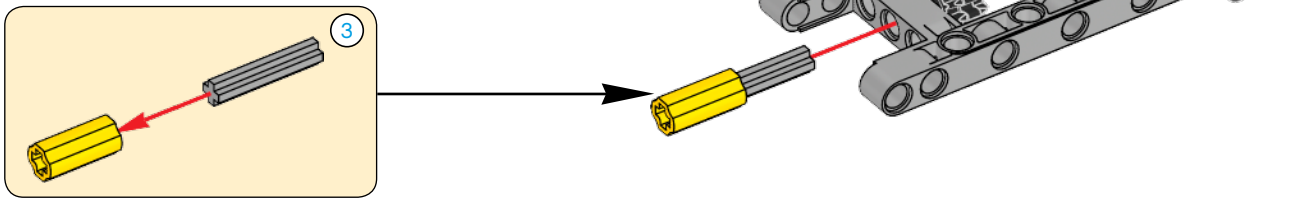

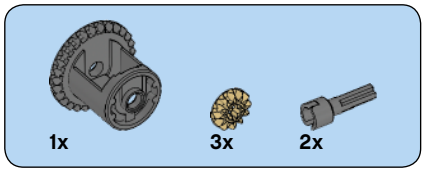

104

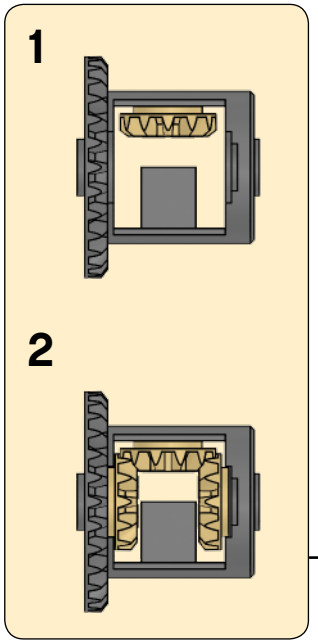

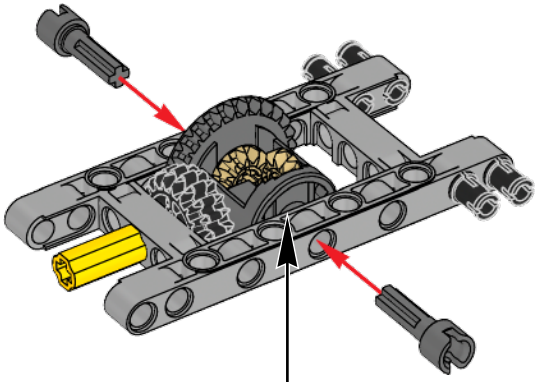

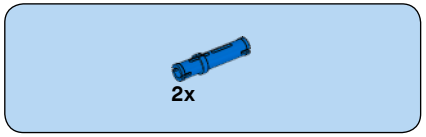

105

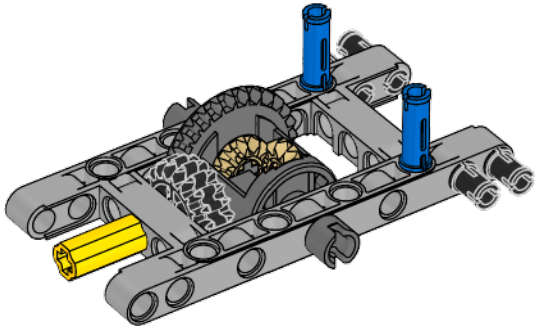

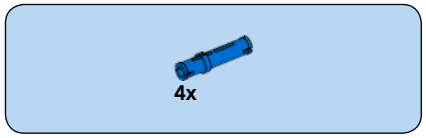

106

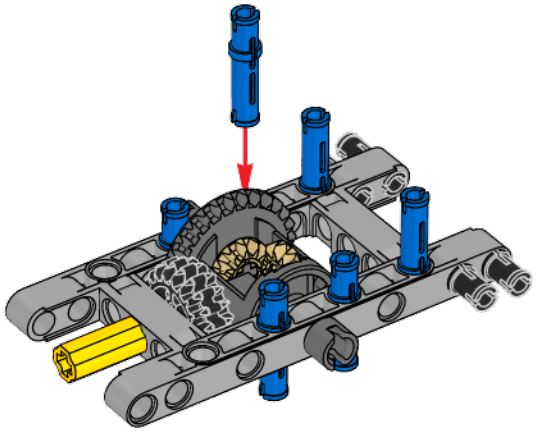

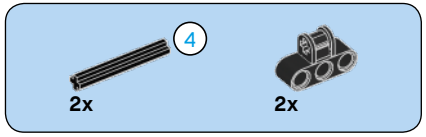

107

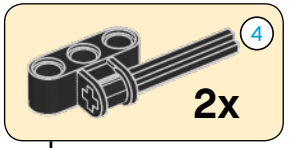

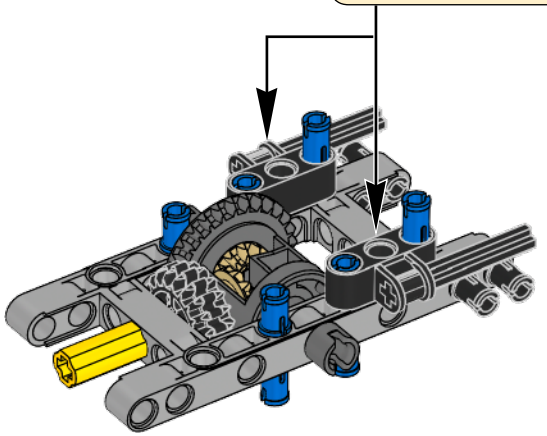

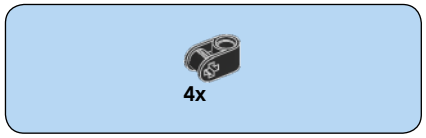

108

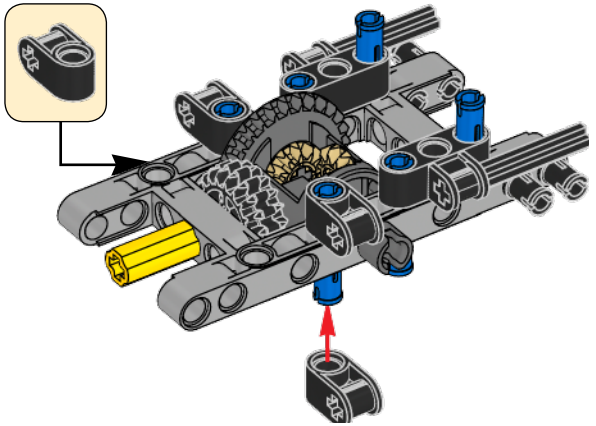

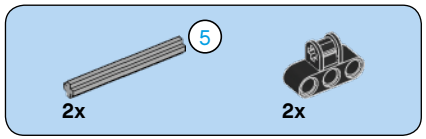

109

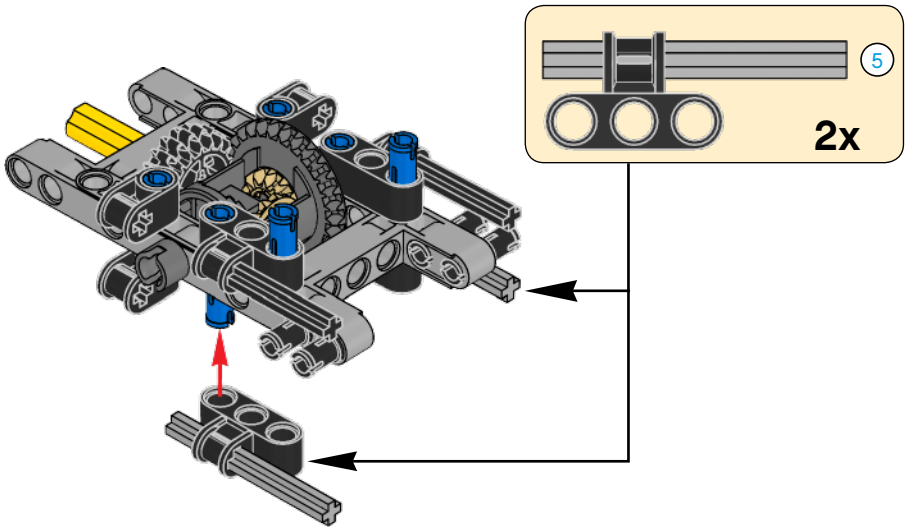

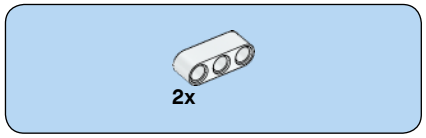

110

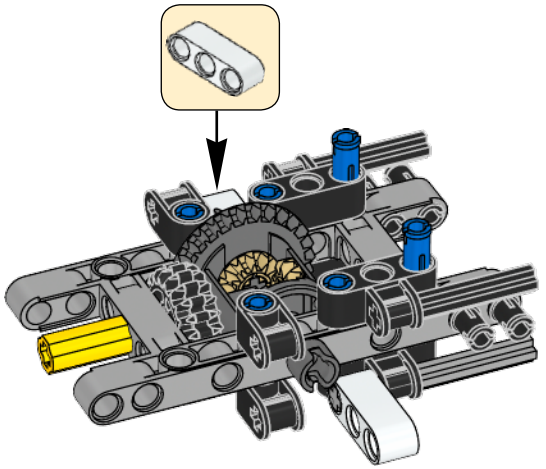

111

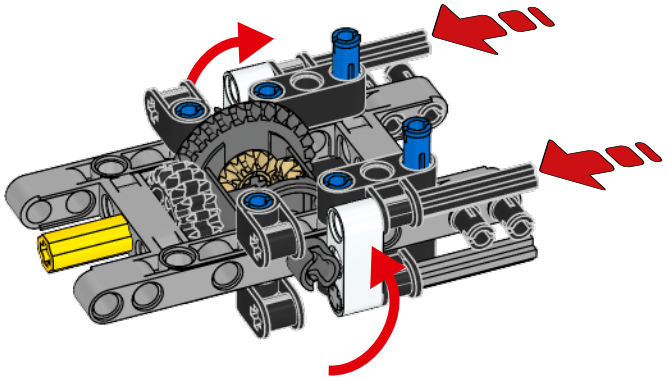

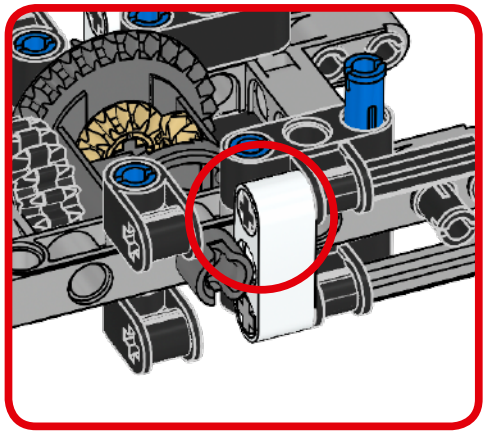

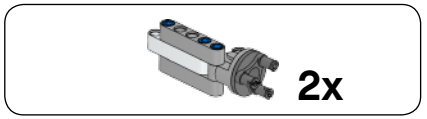

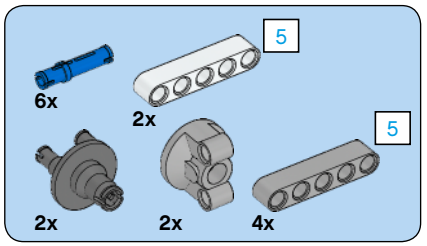

112

1

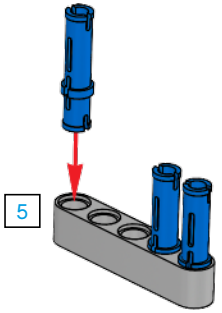

2

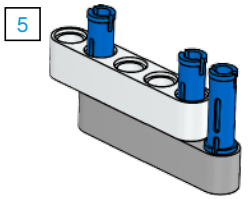

4

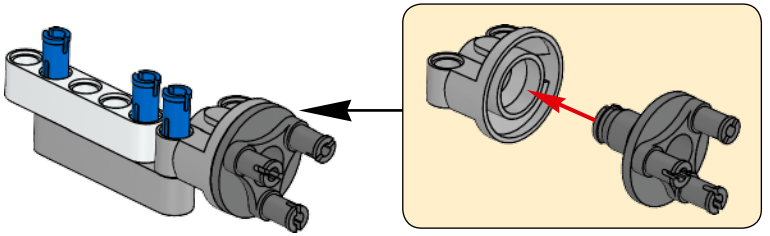

5

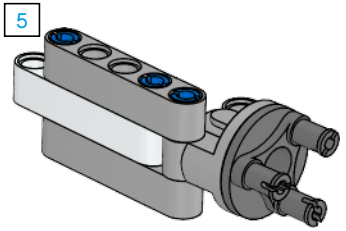

2x

113

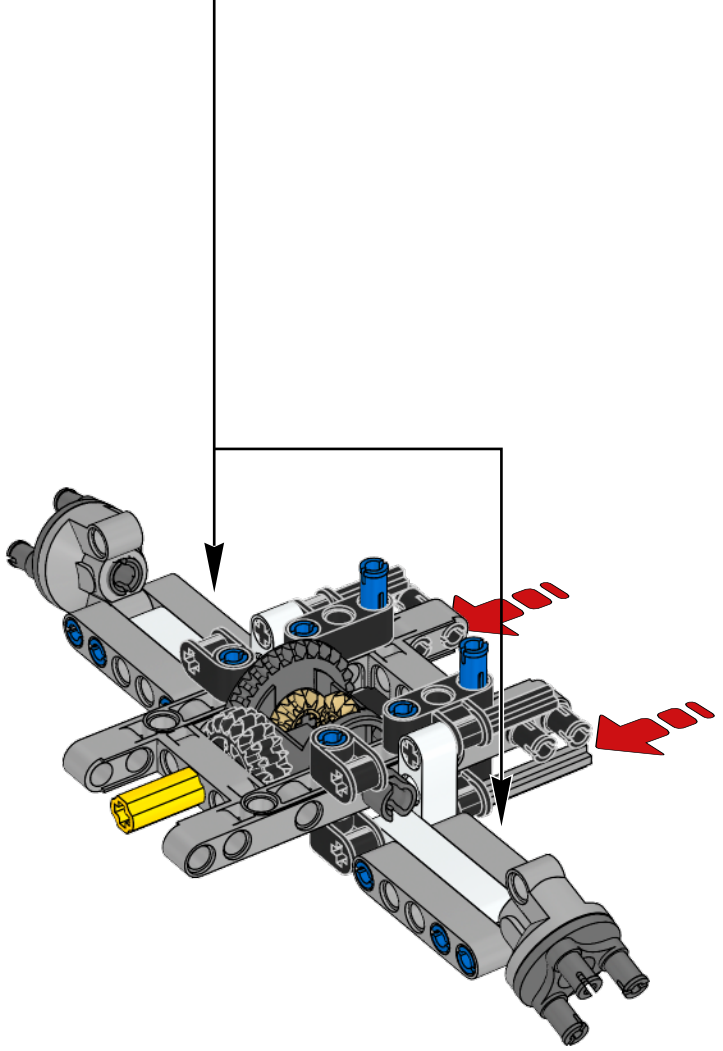

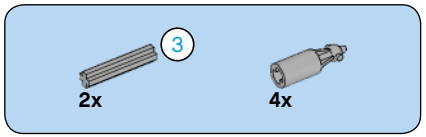

114

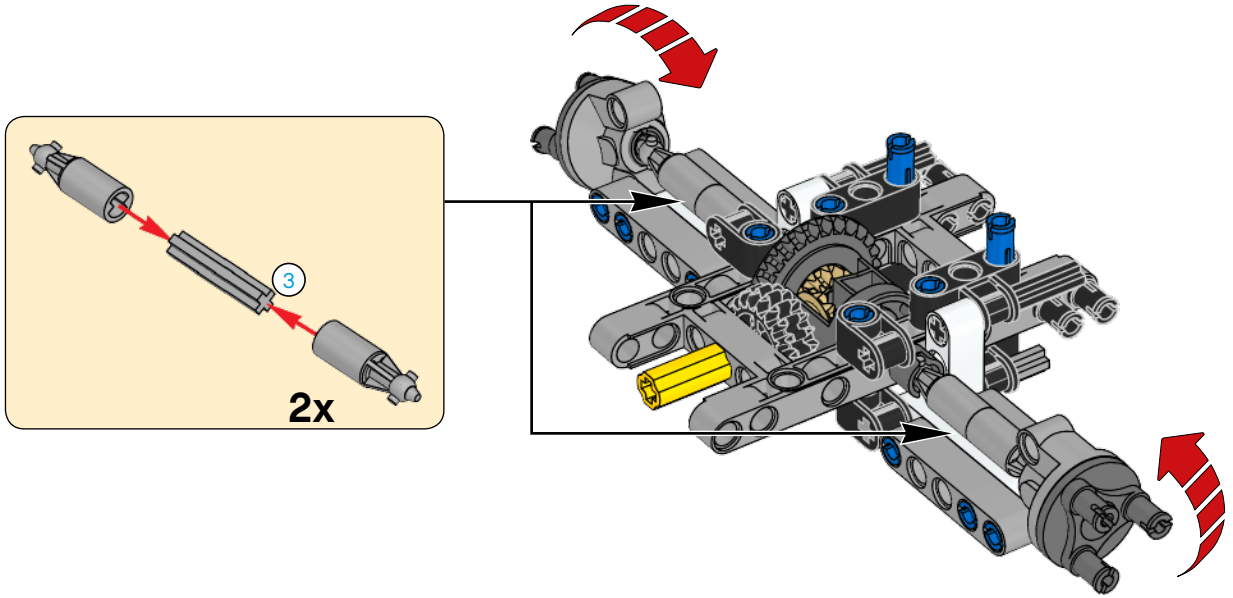

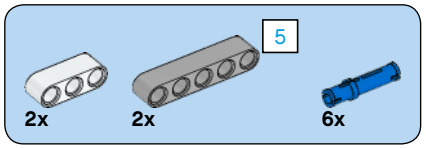

115

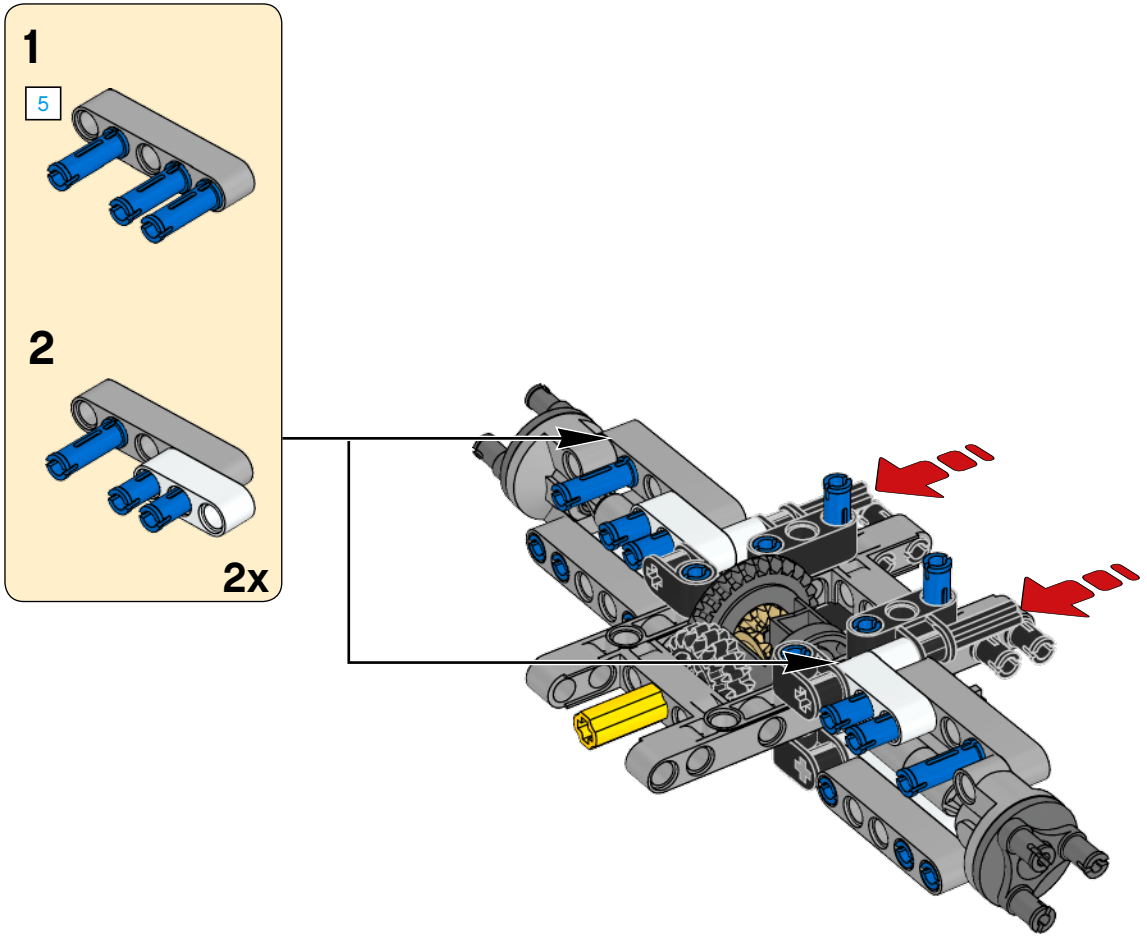

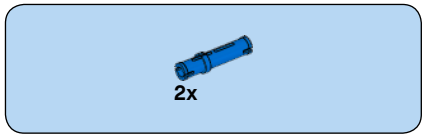

116

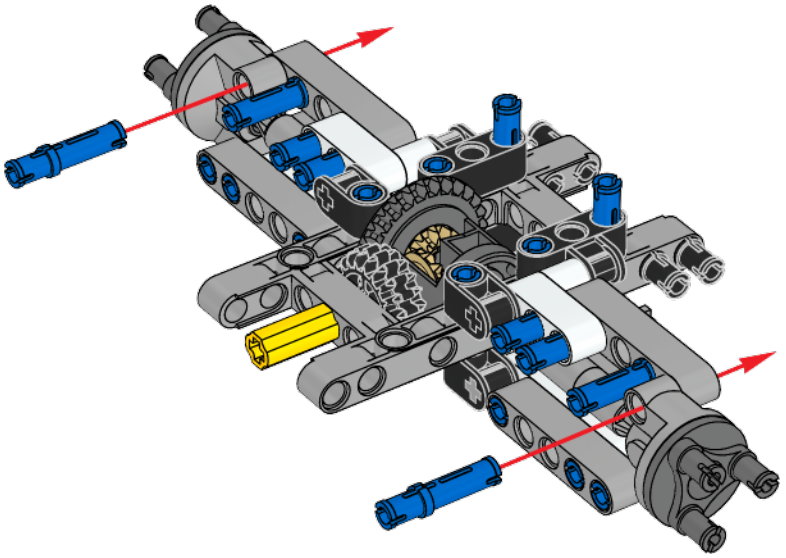

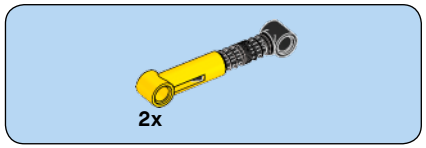

117

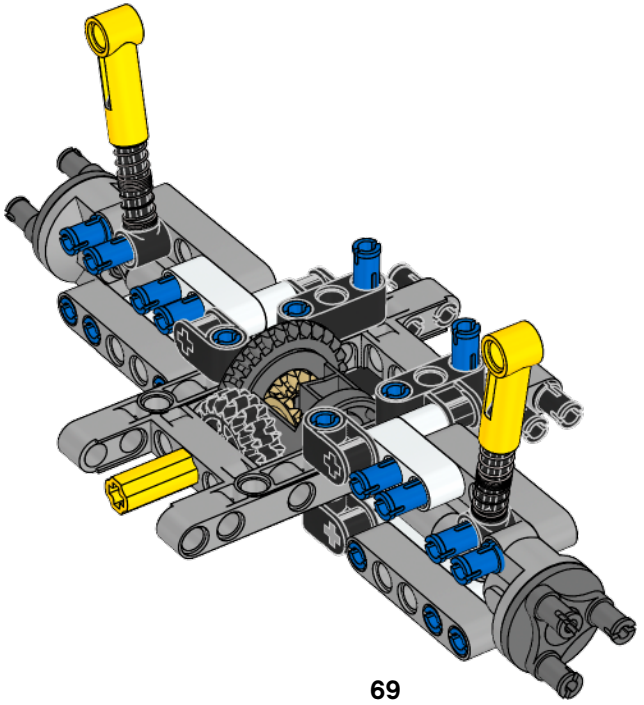

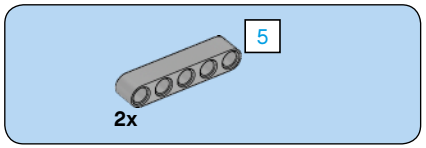

118

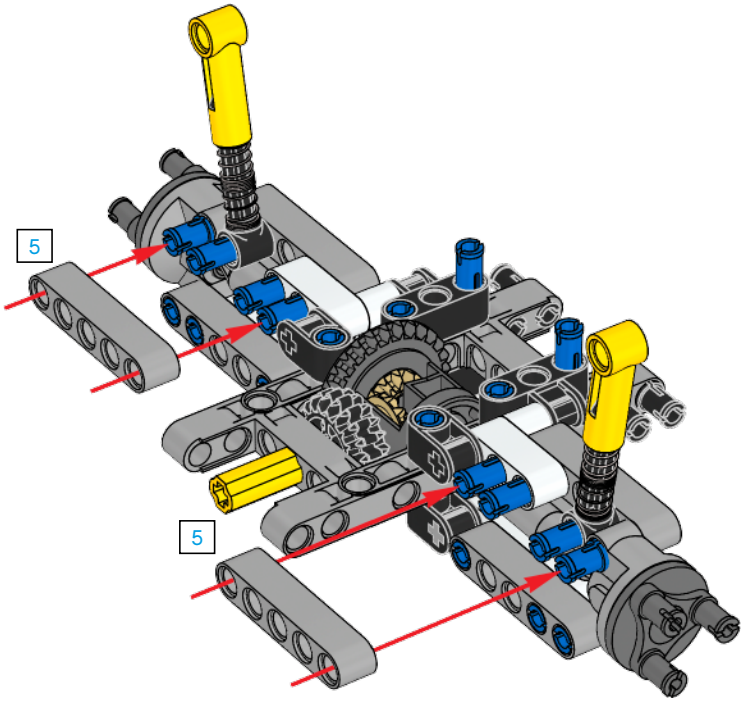

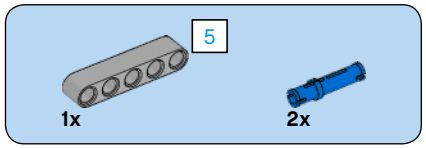

119

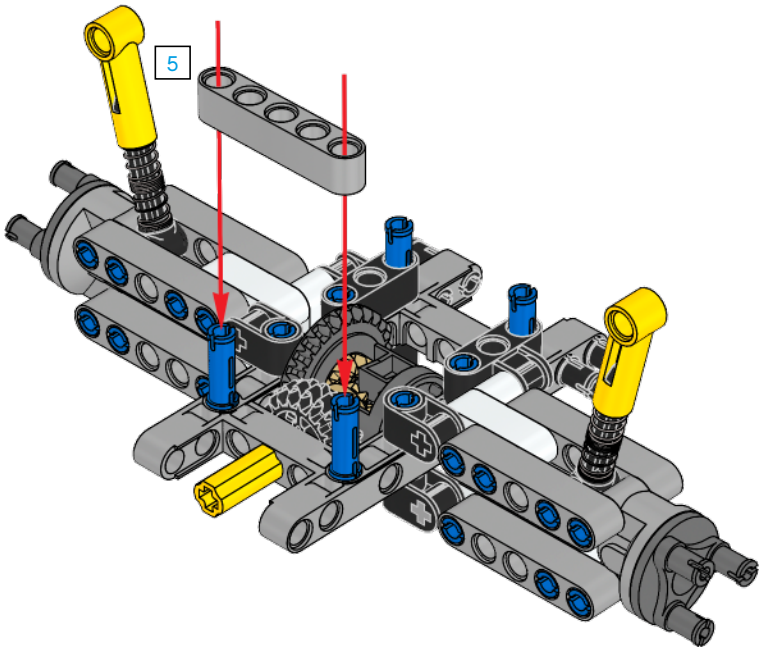

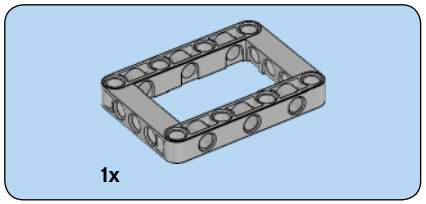

120

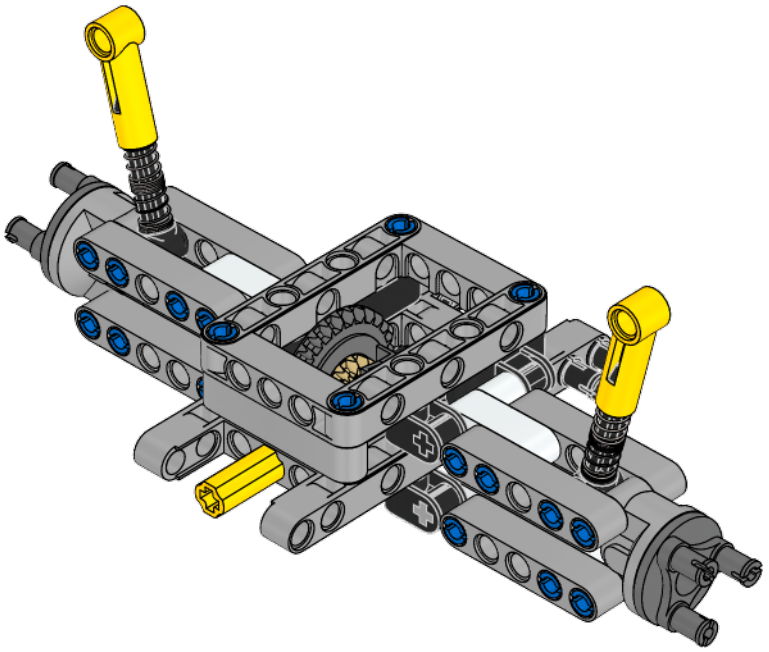

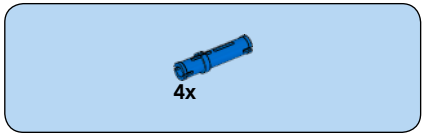

121

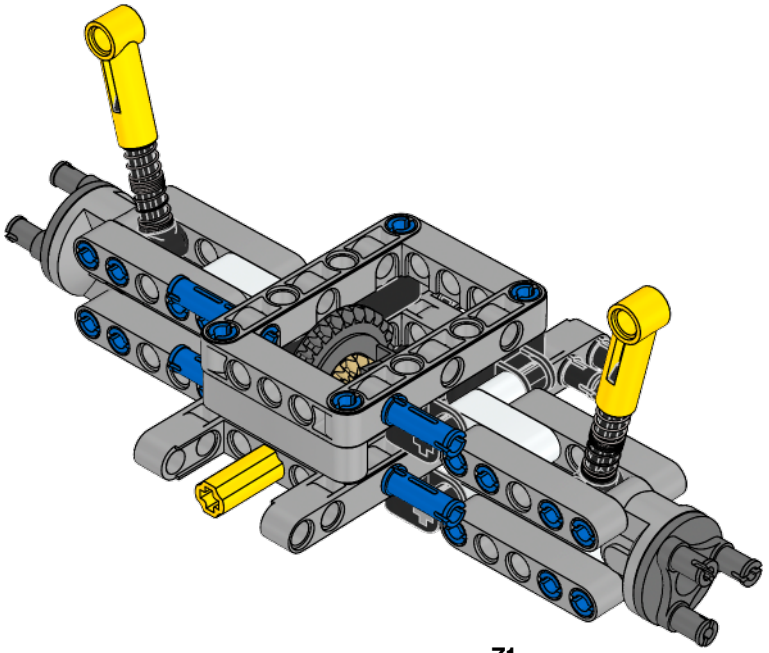

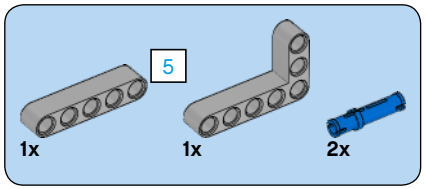

122

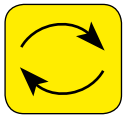

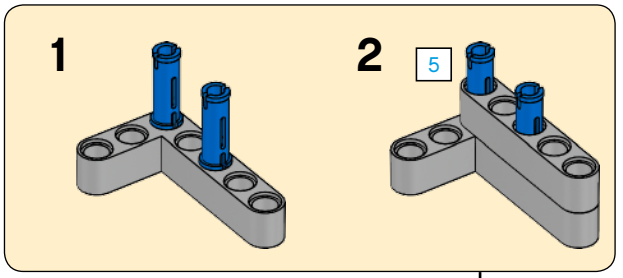

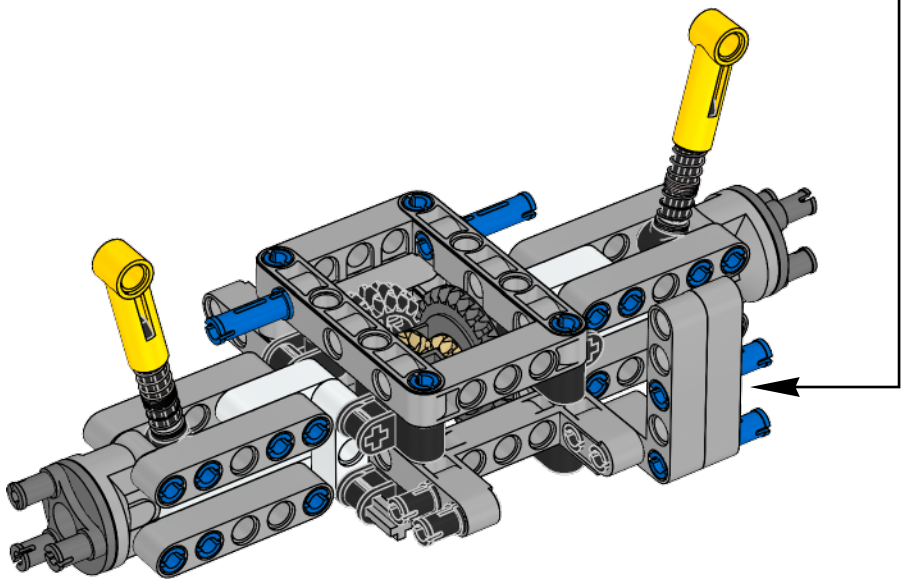

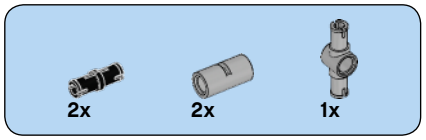

123

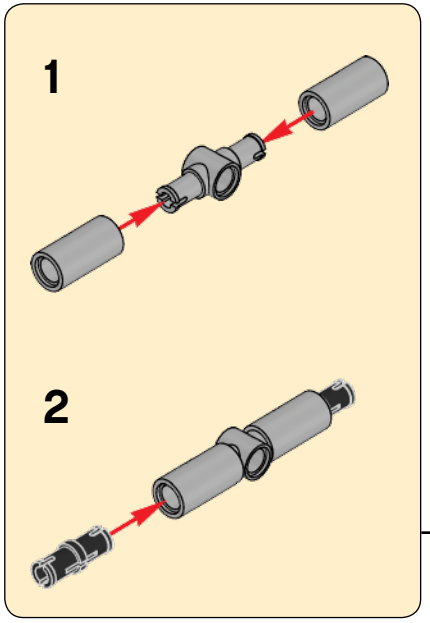

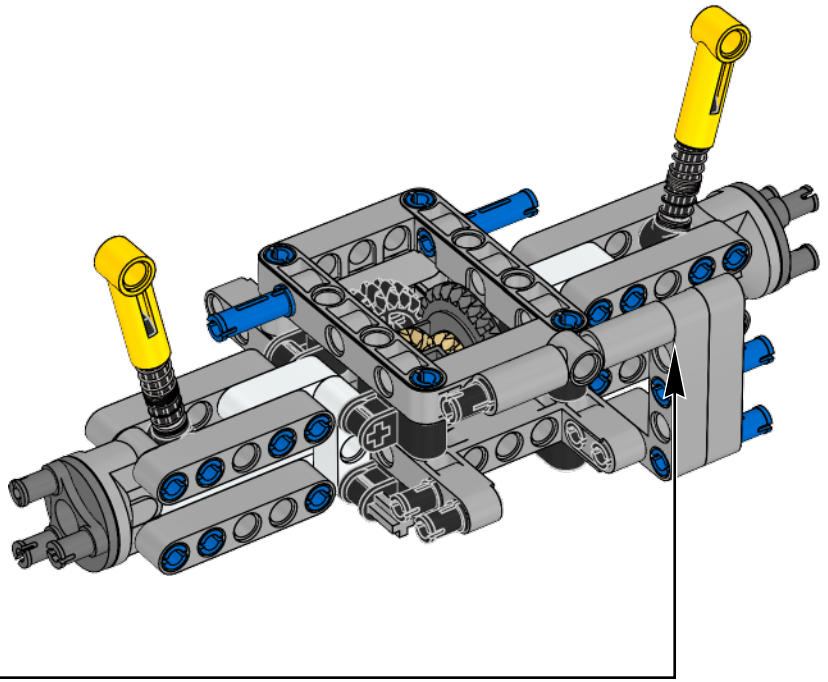

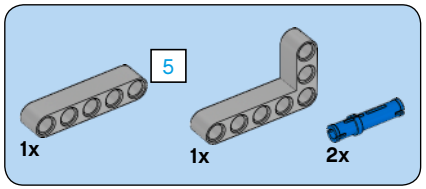

124

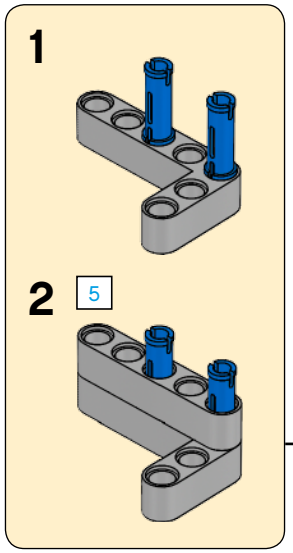

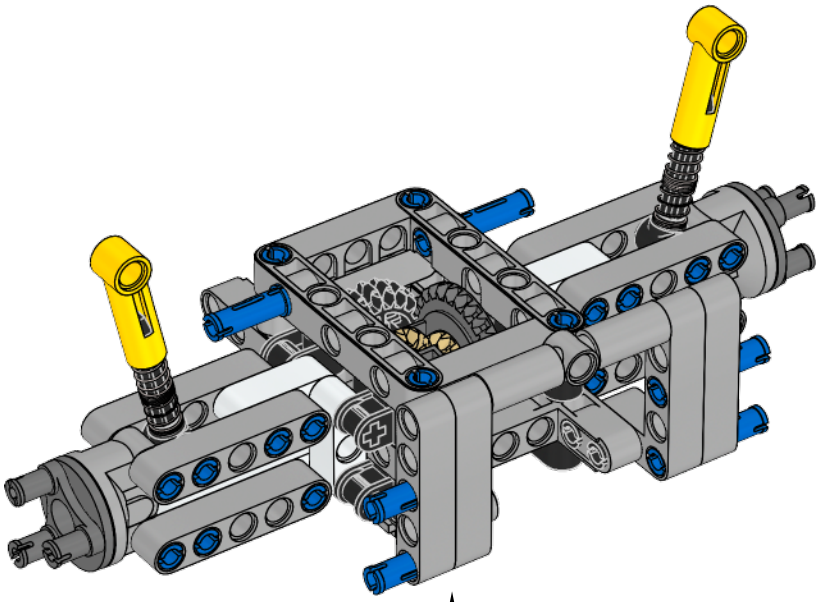

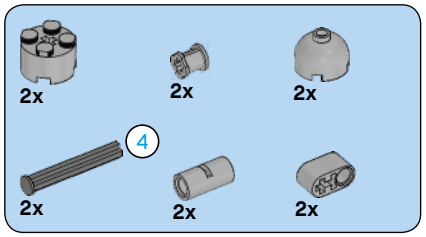

125

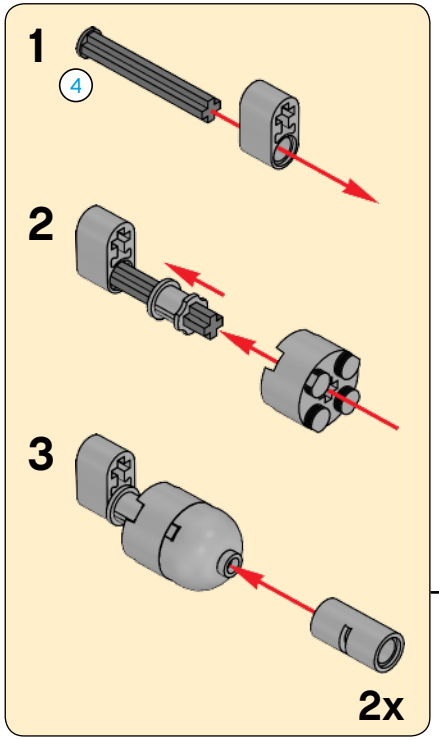

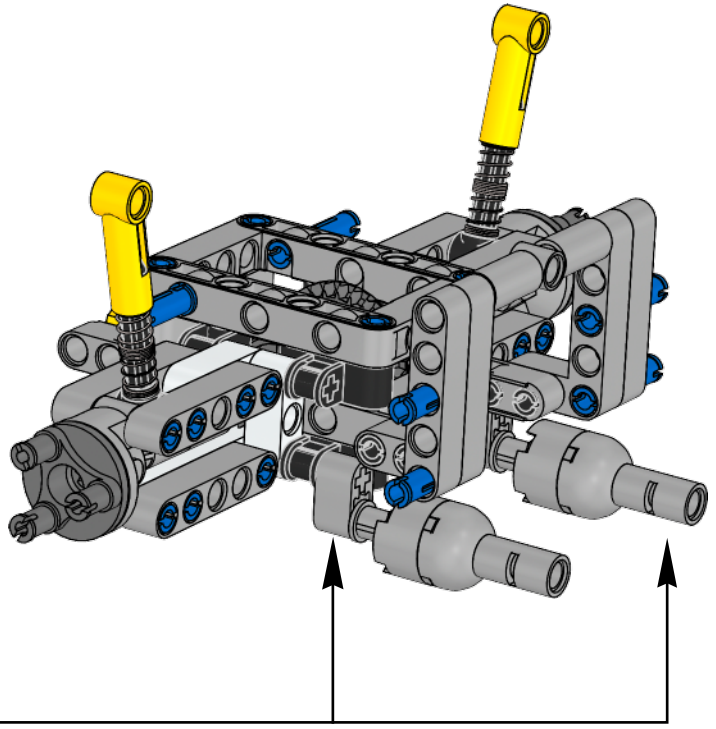

2x

126

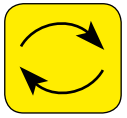

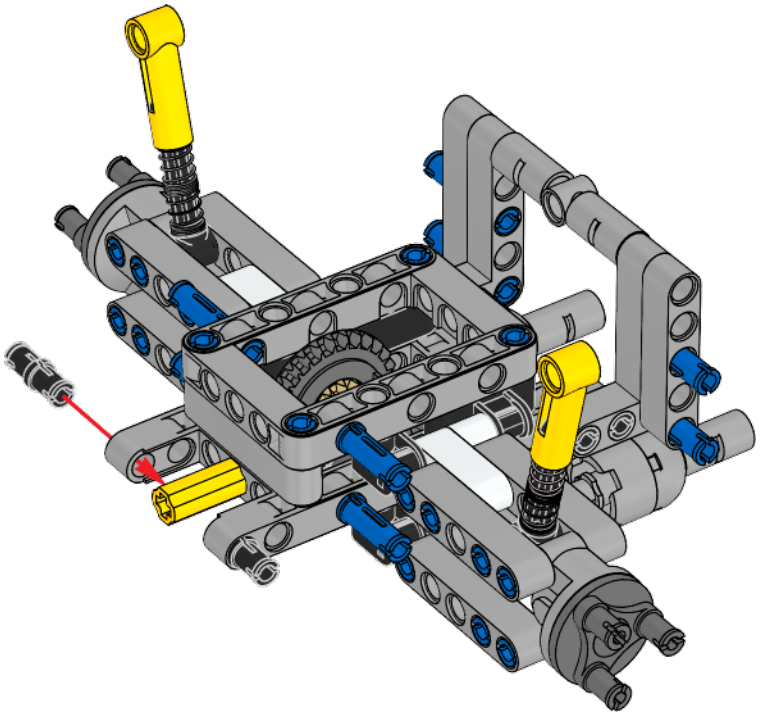

127

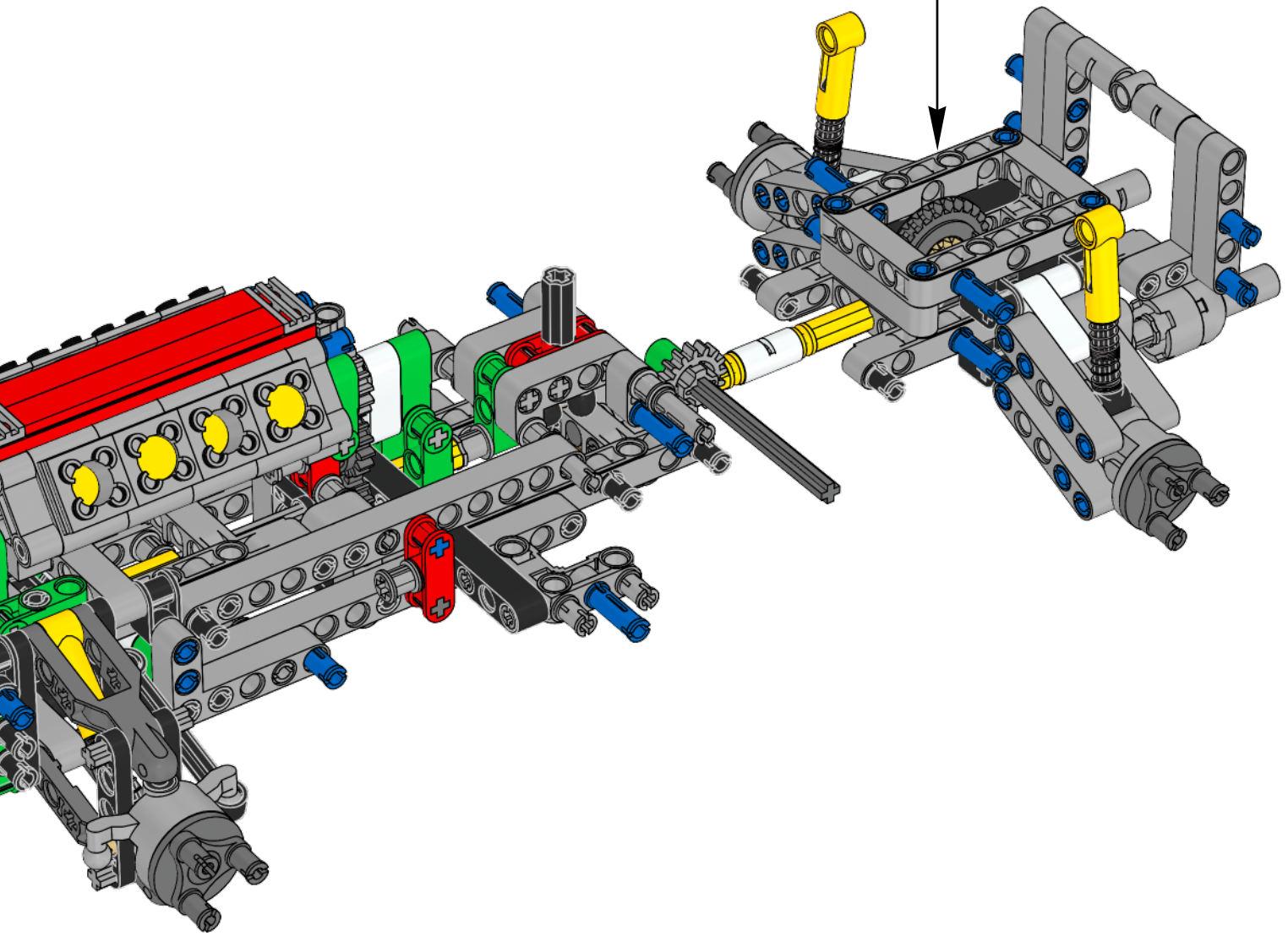

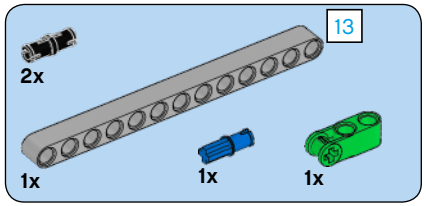

128

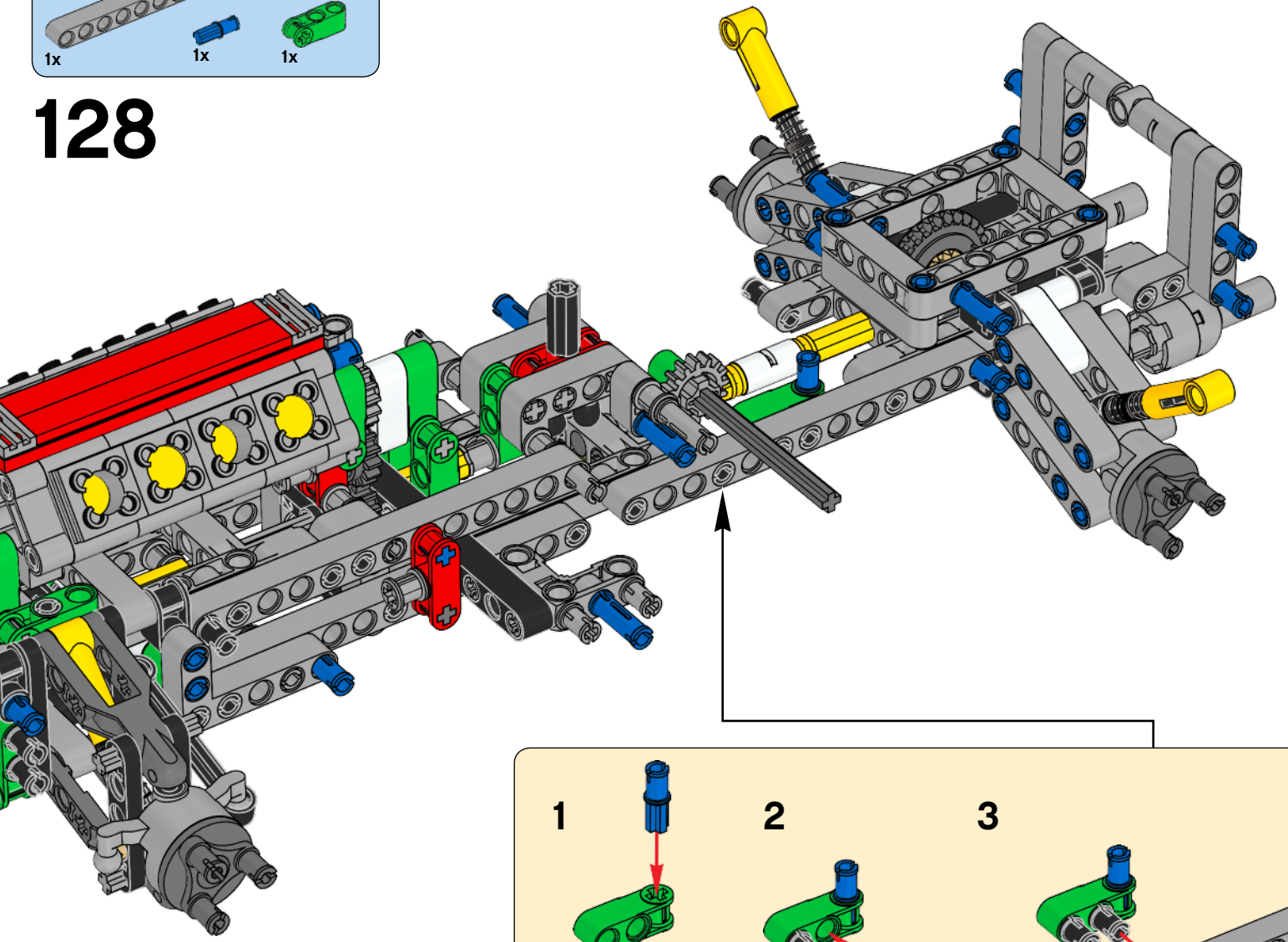

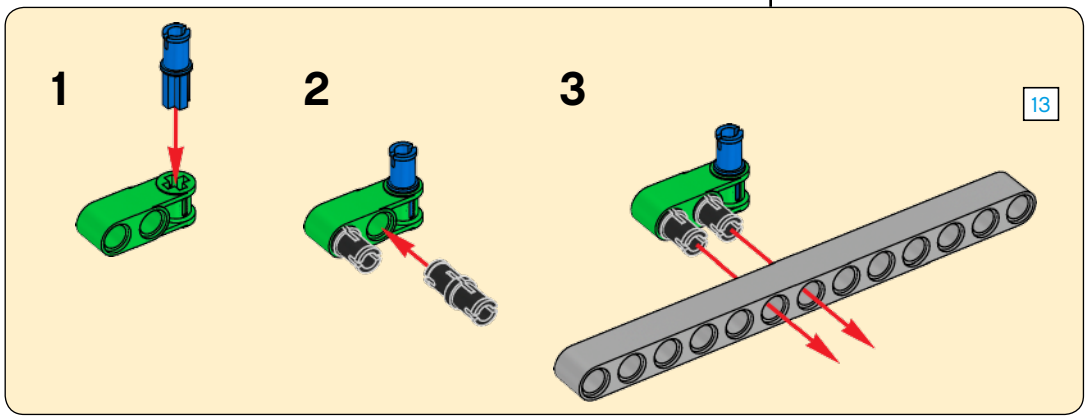

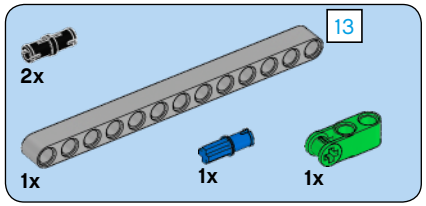

129

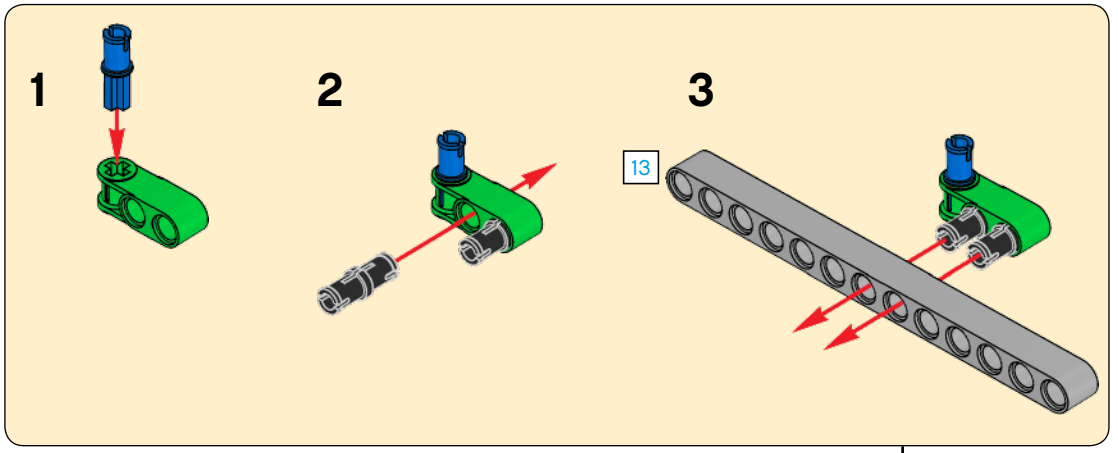

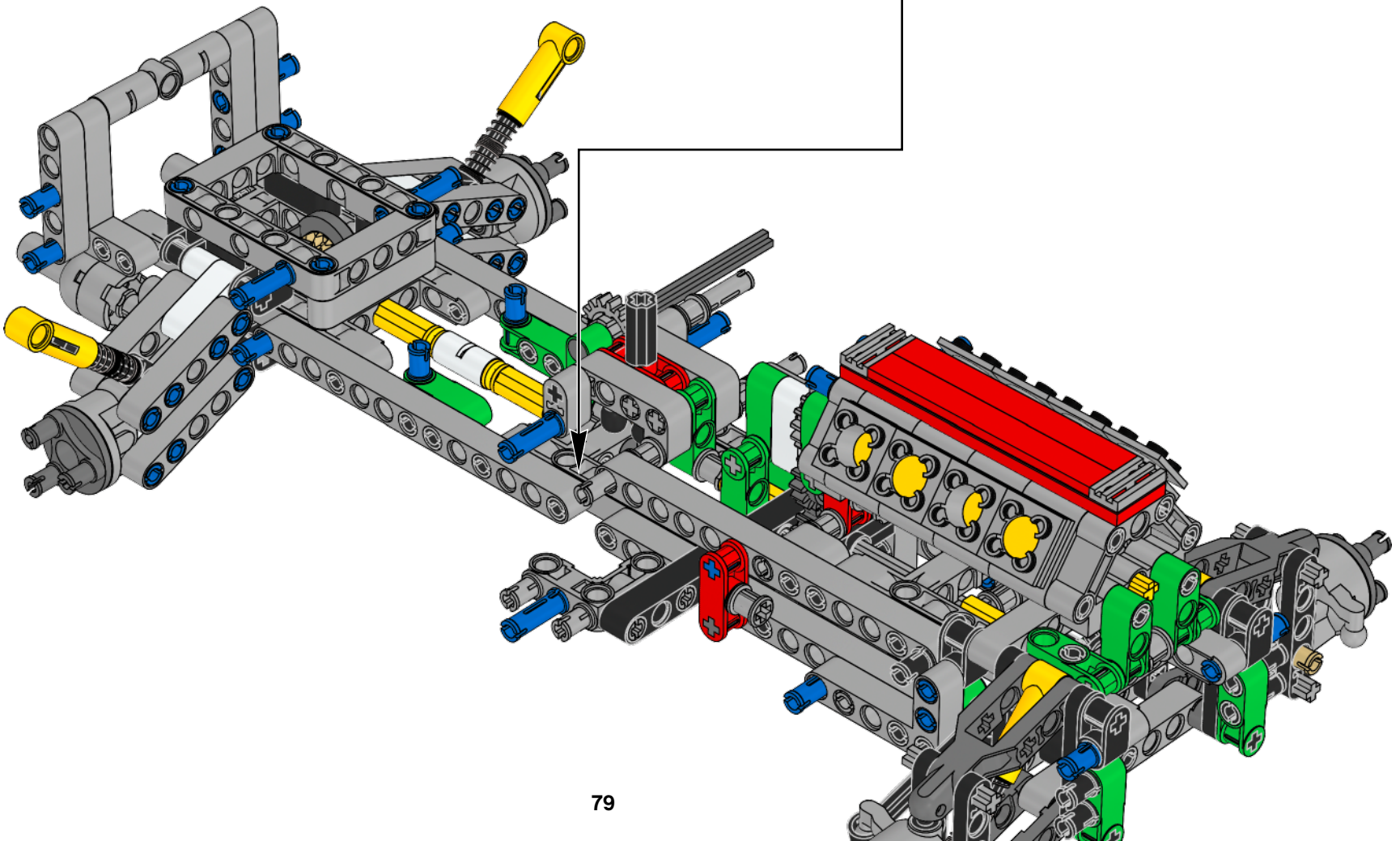

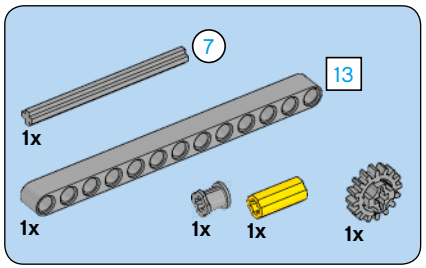

130

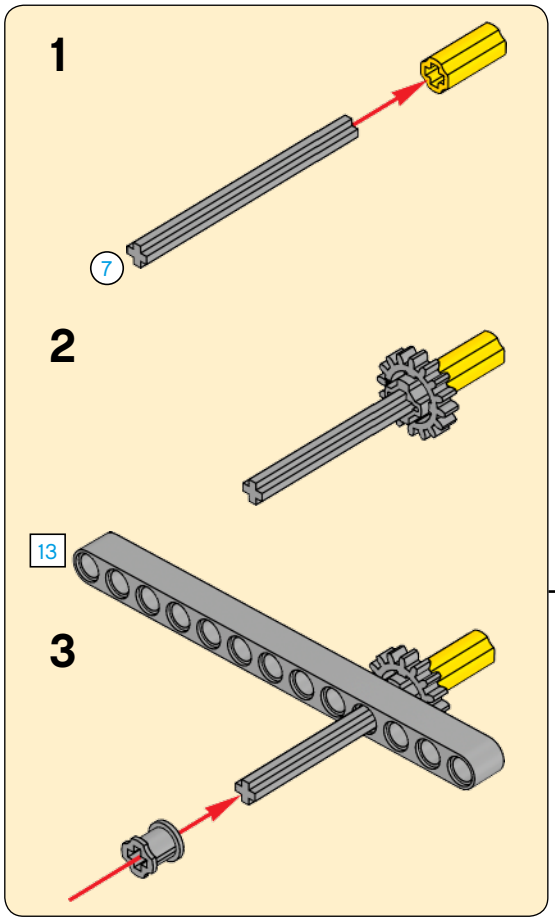

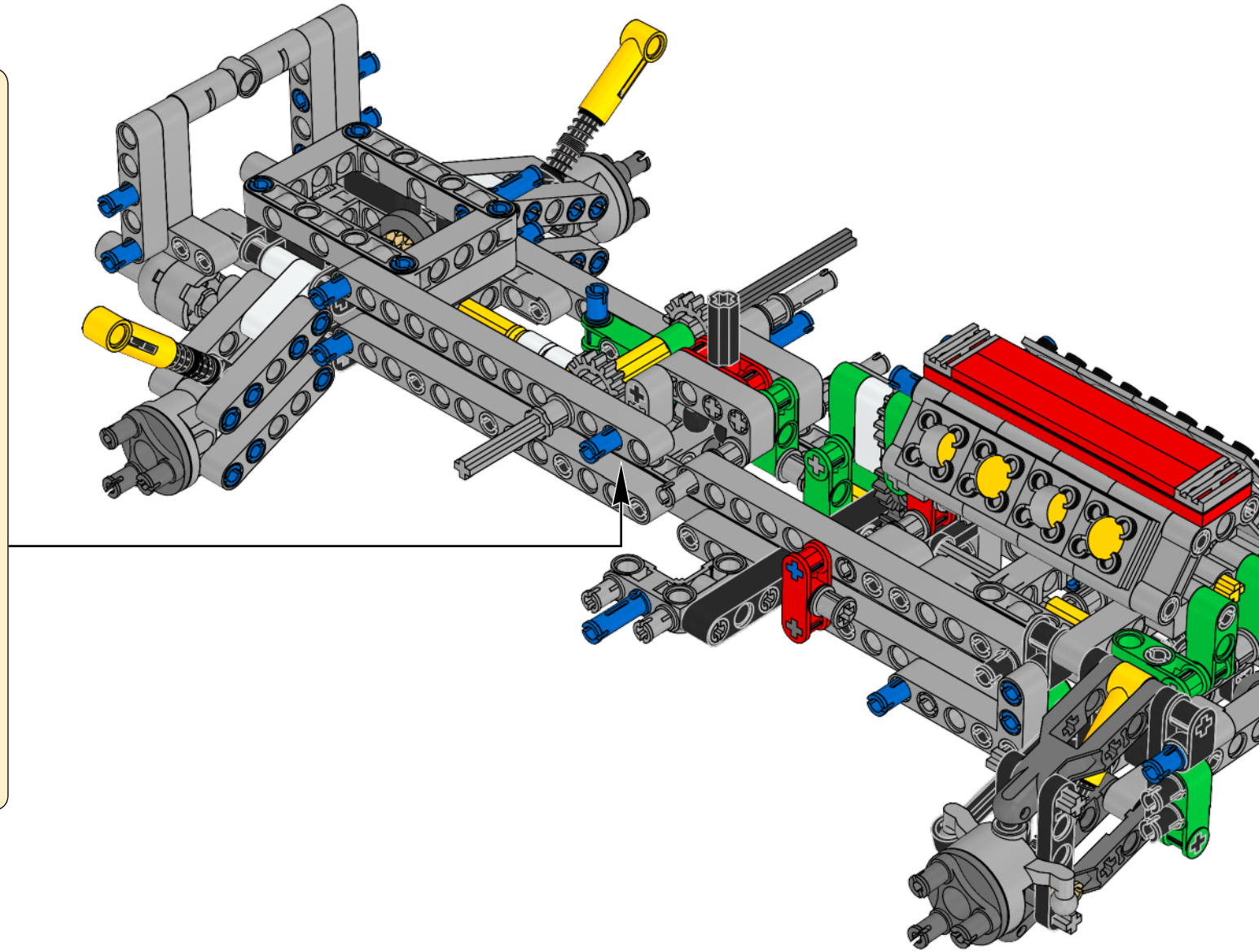

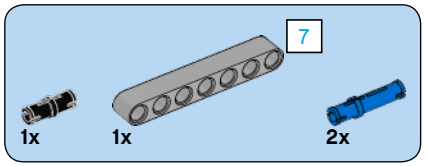

131

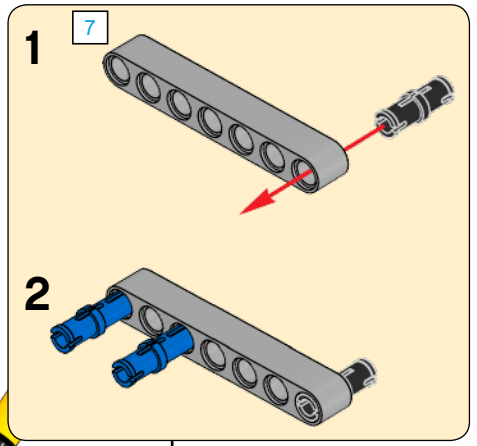

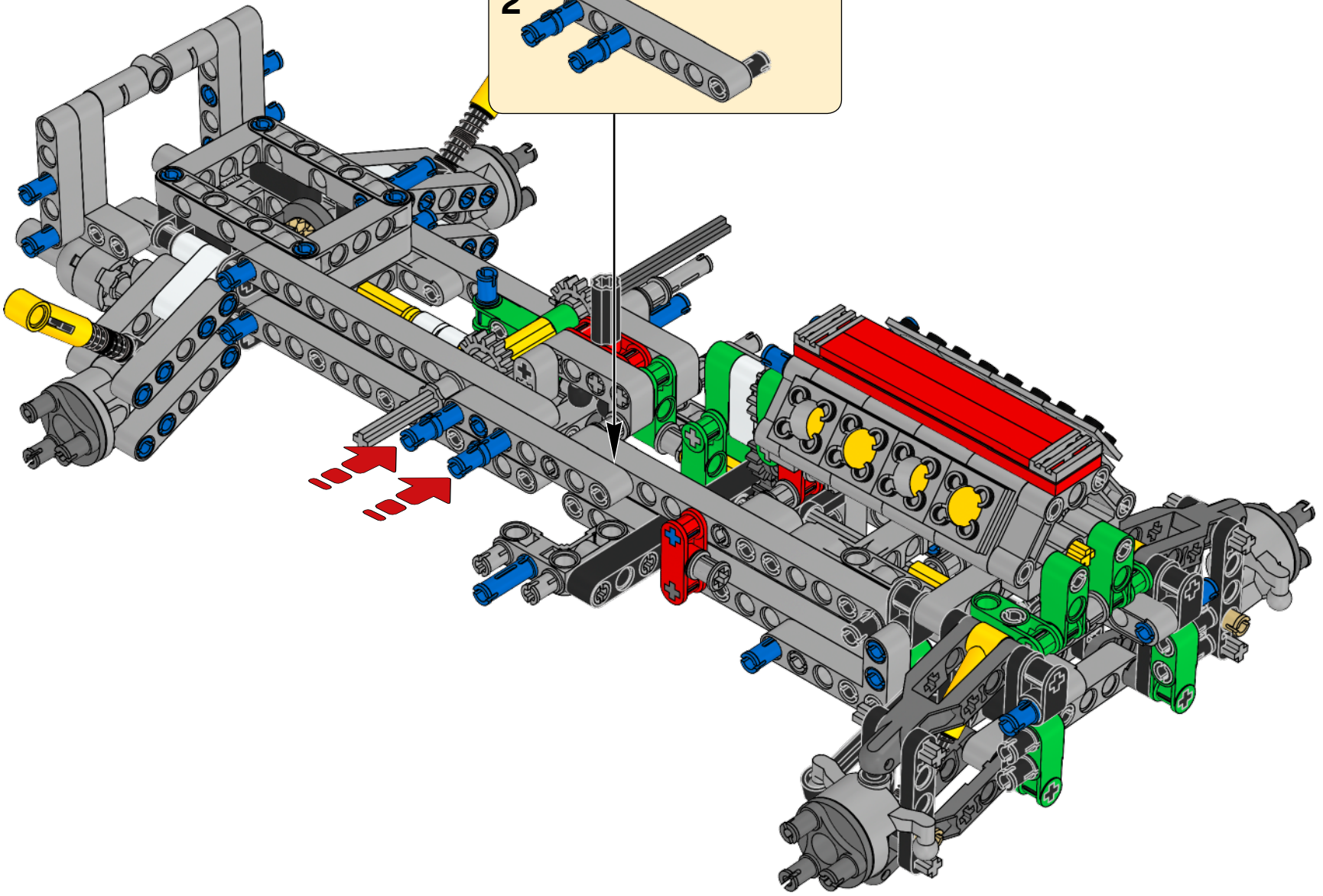

132

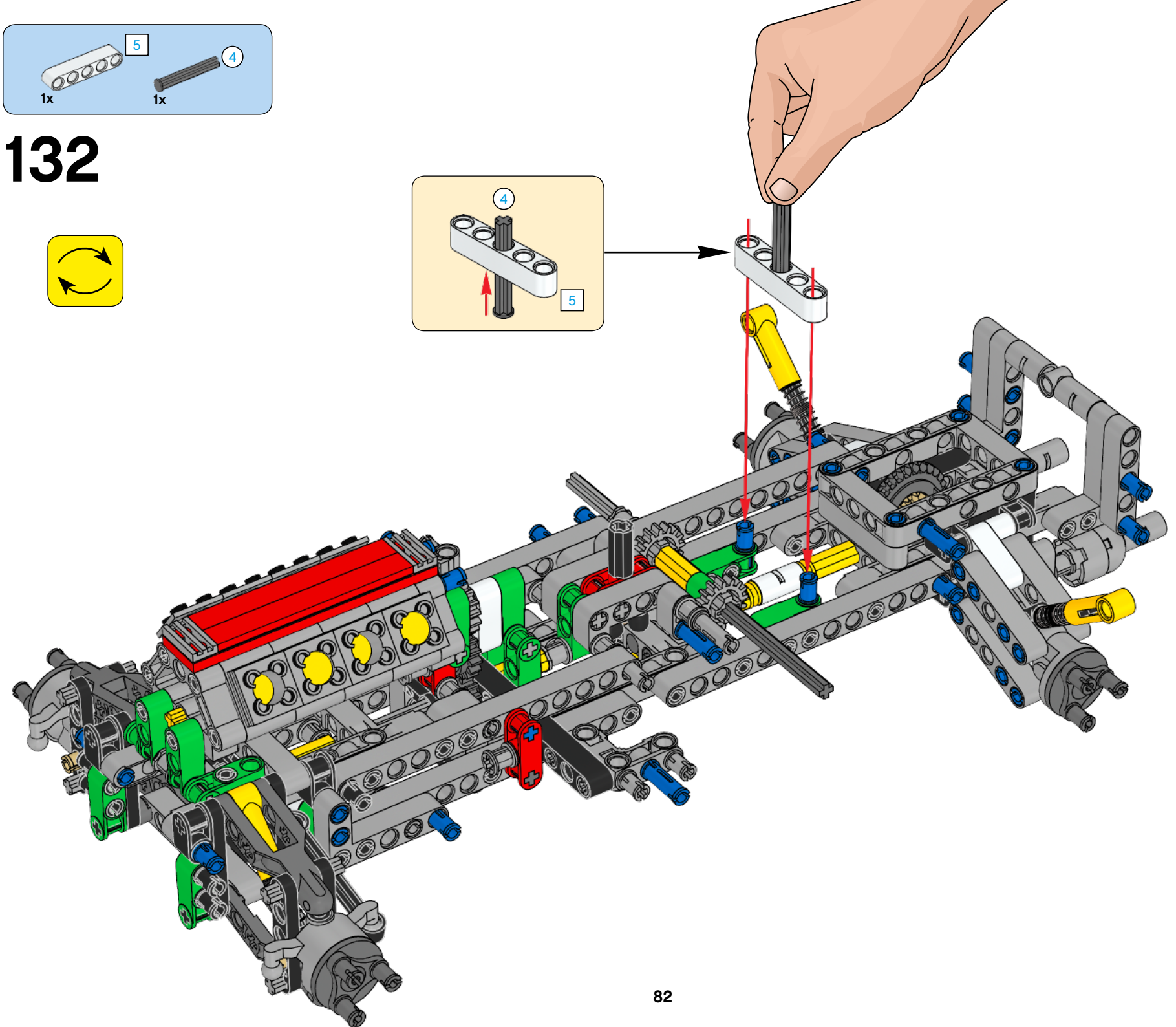

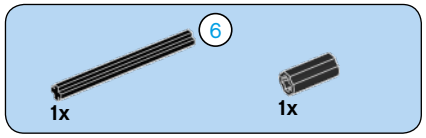

133

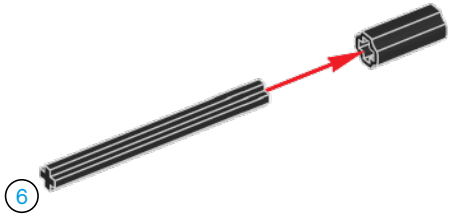

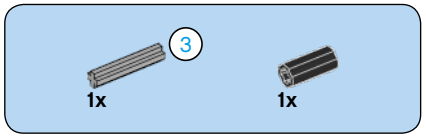

134

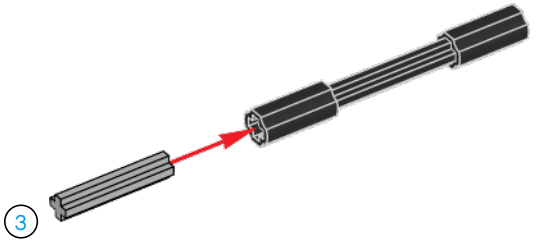

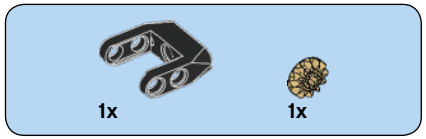

135

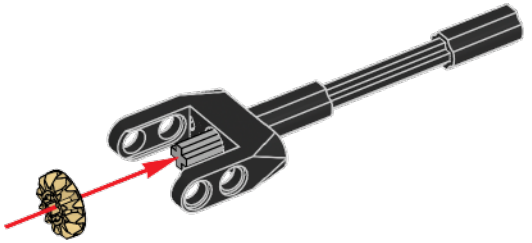

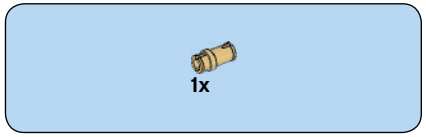

136

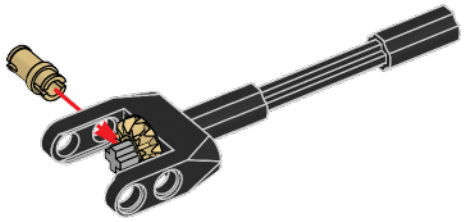

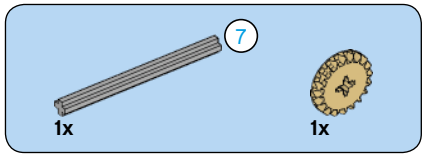

137

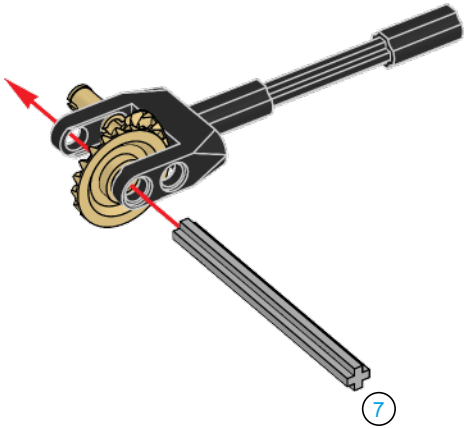

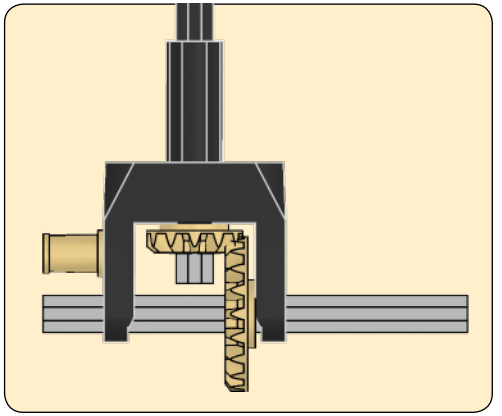

138

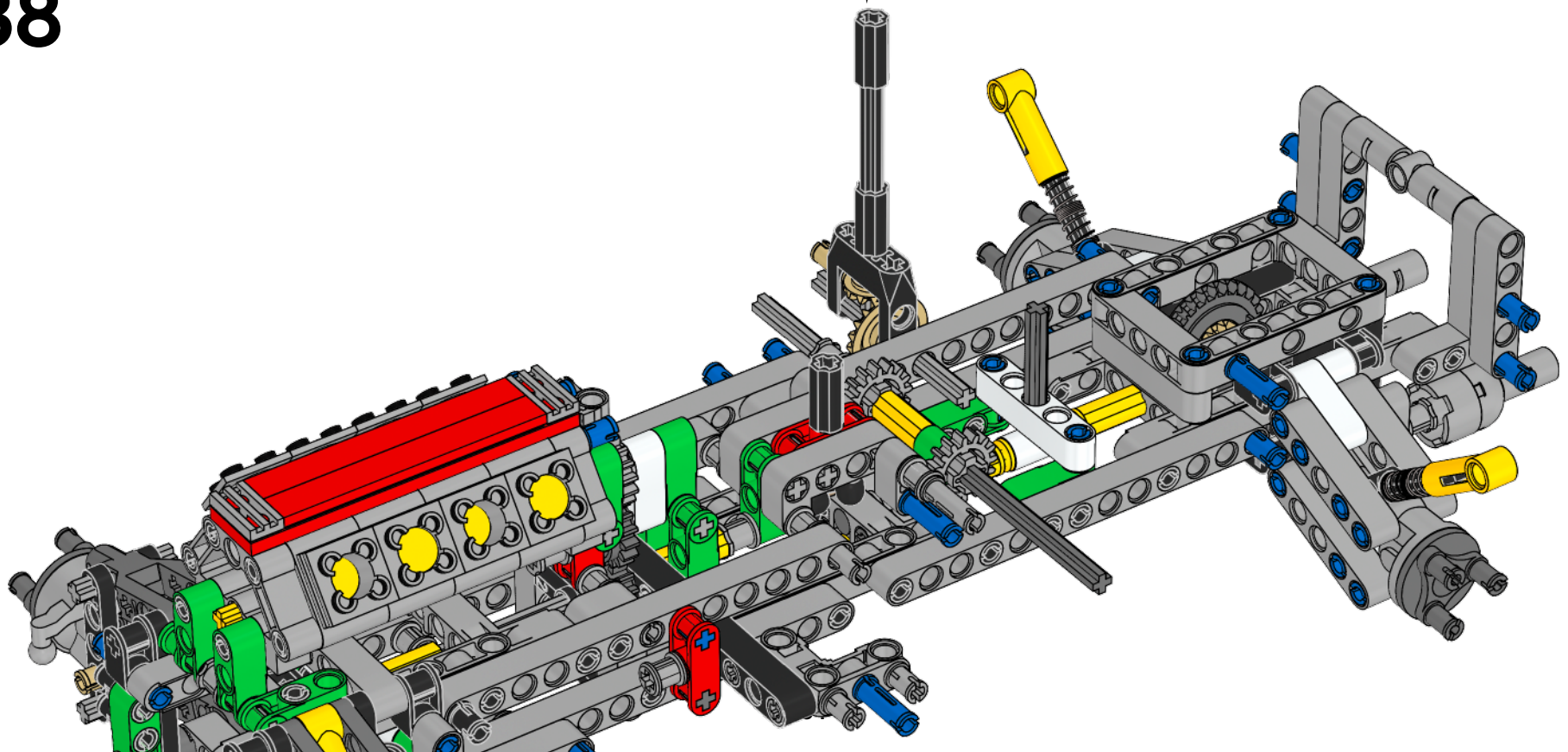

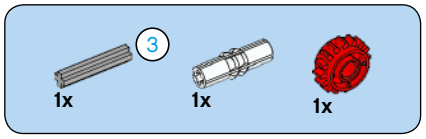

139

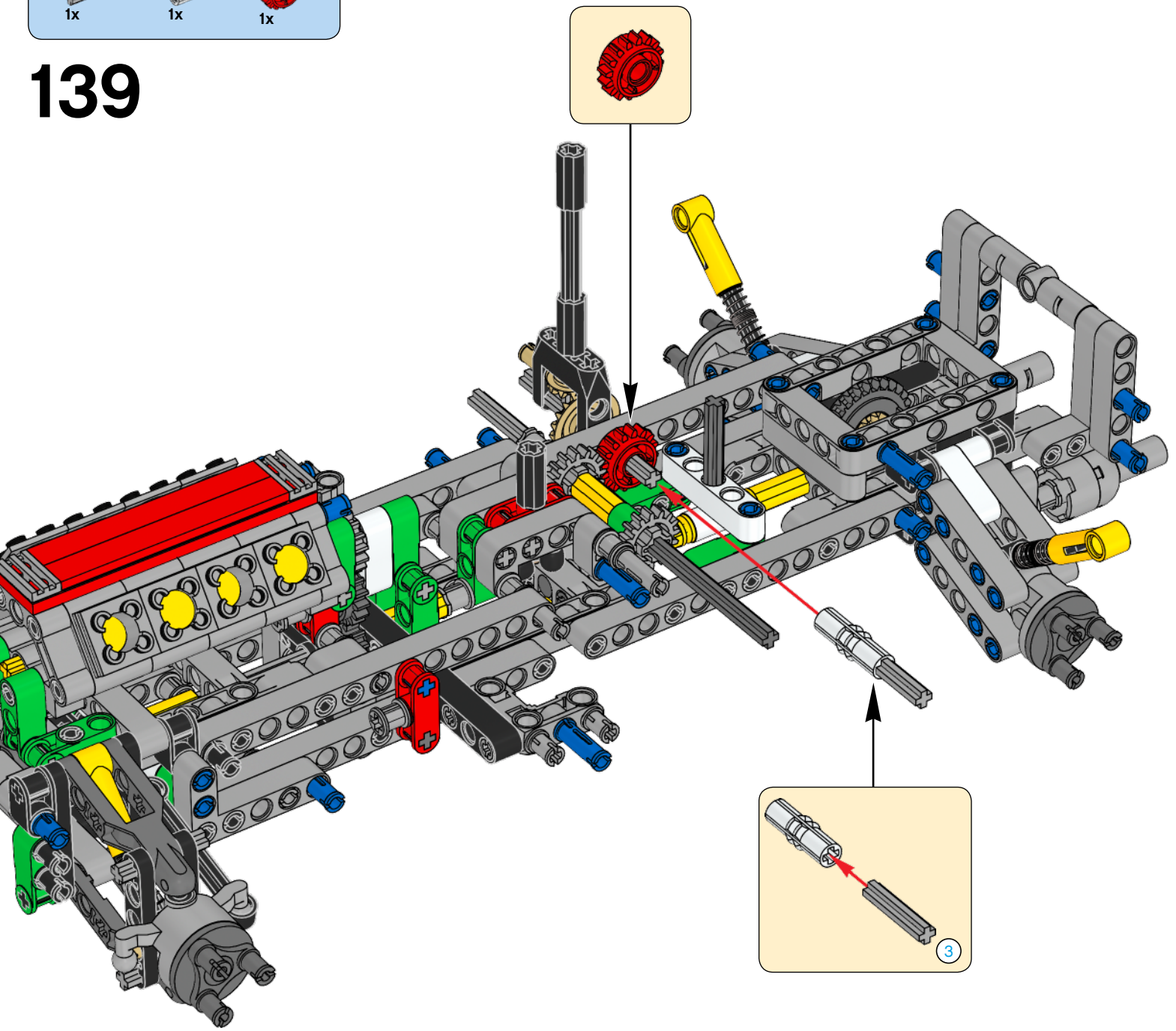

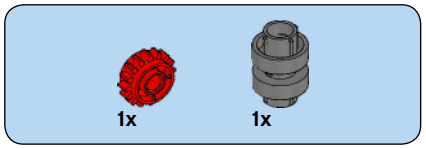

140

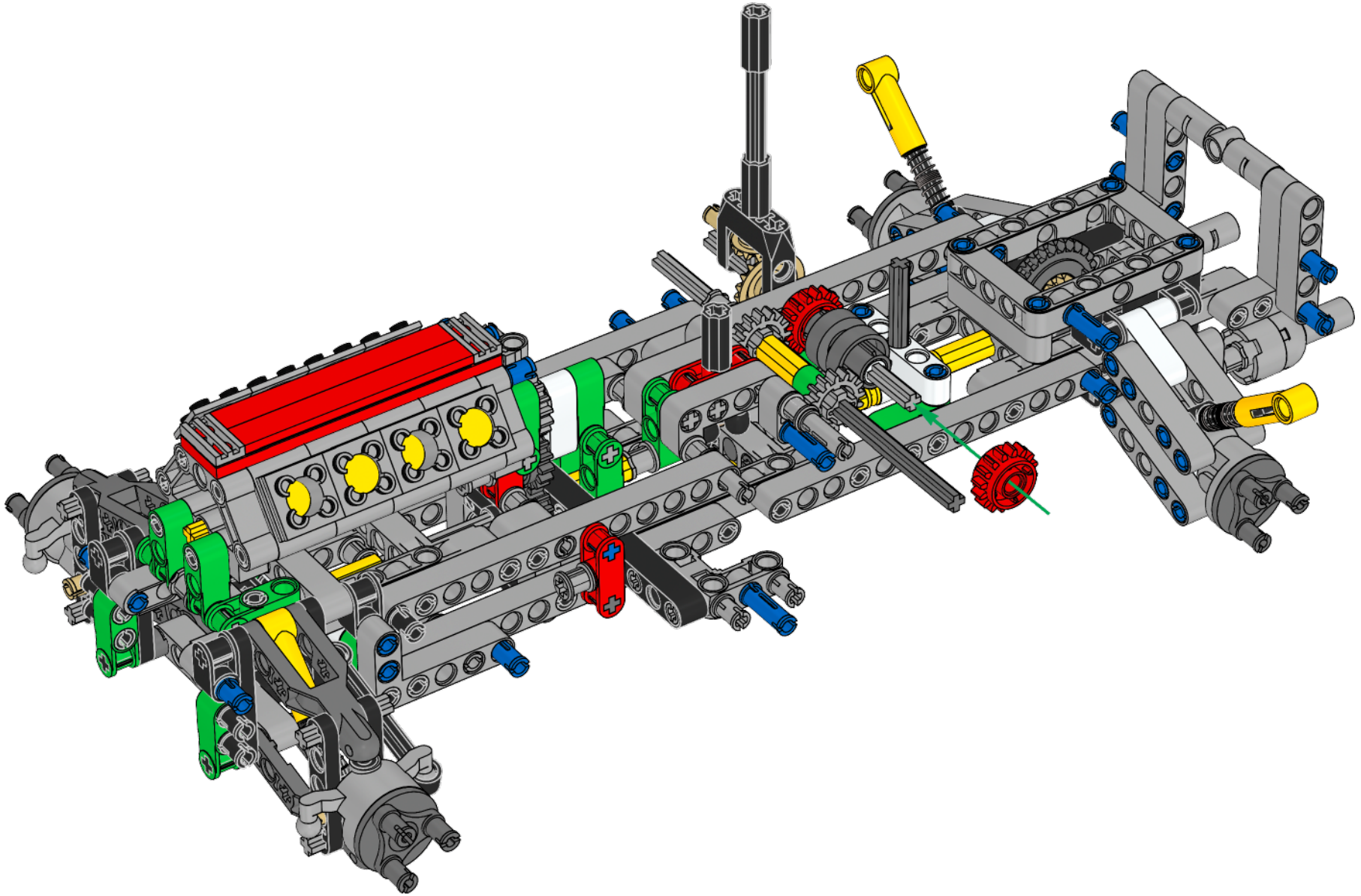

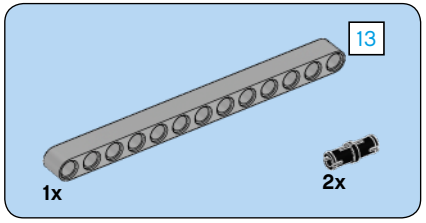

141

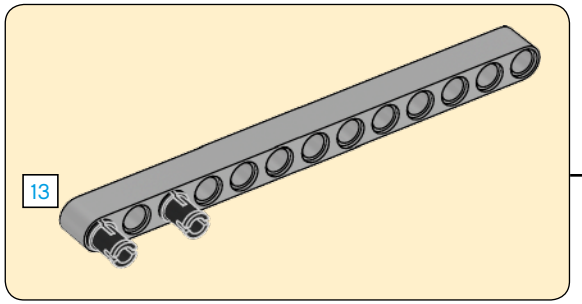

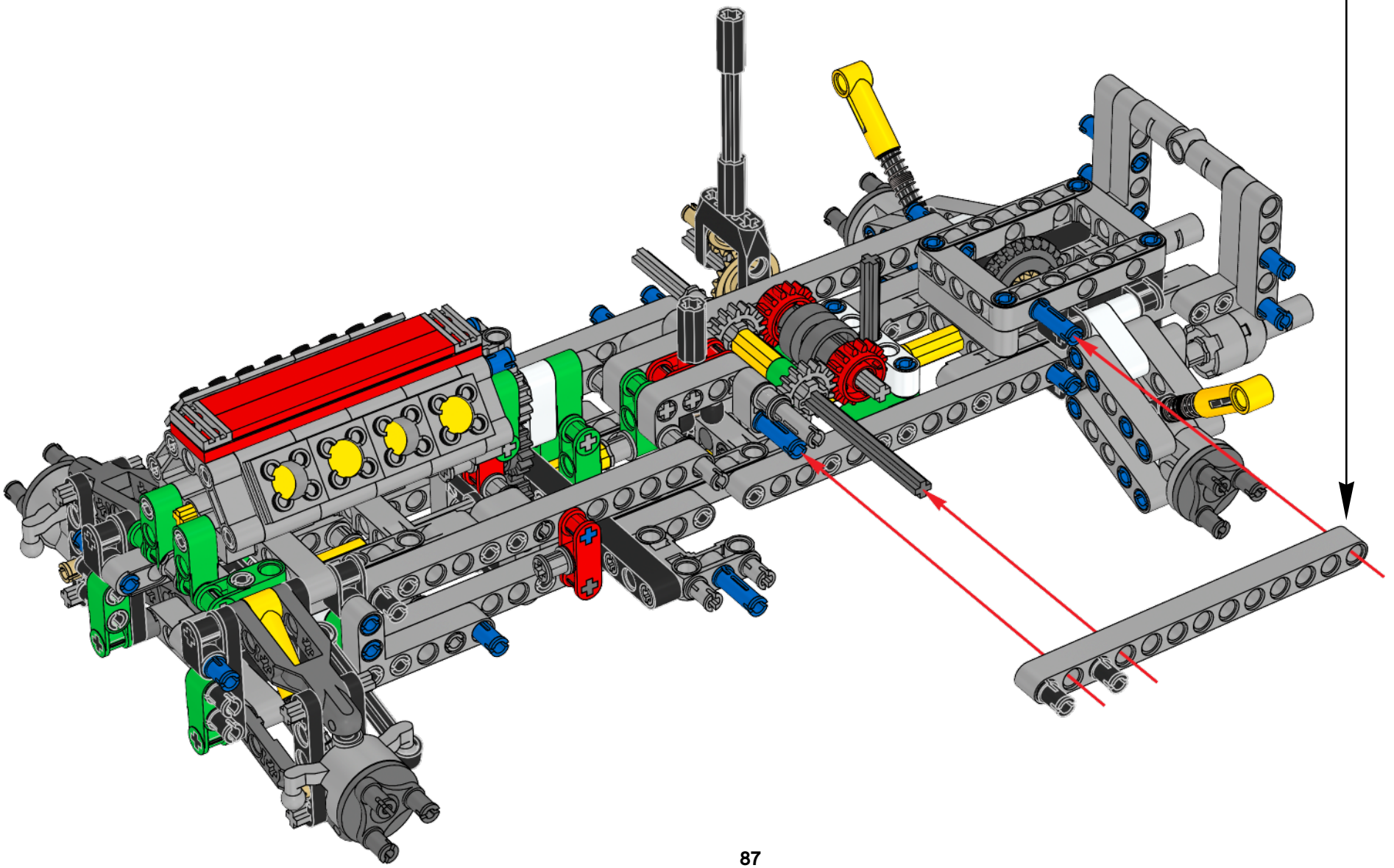

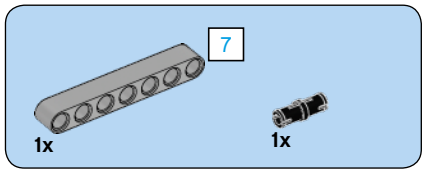

142

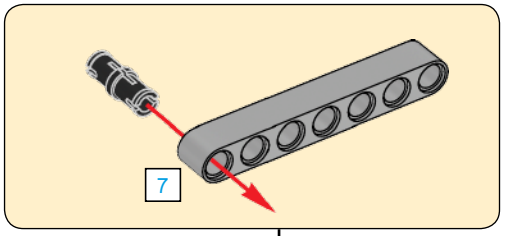

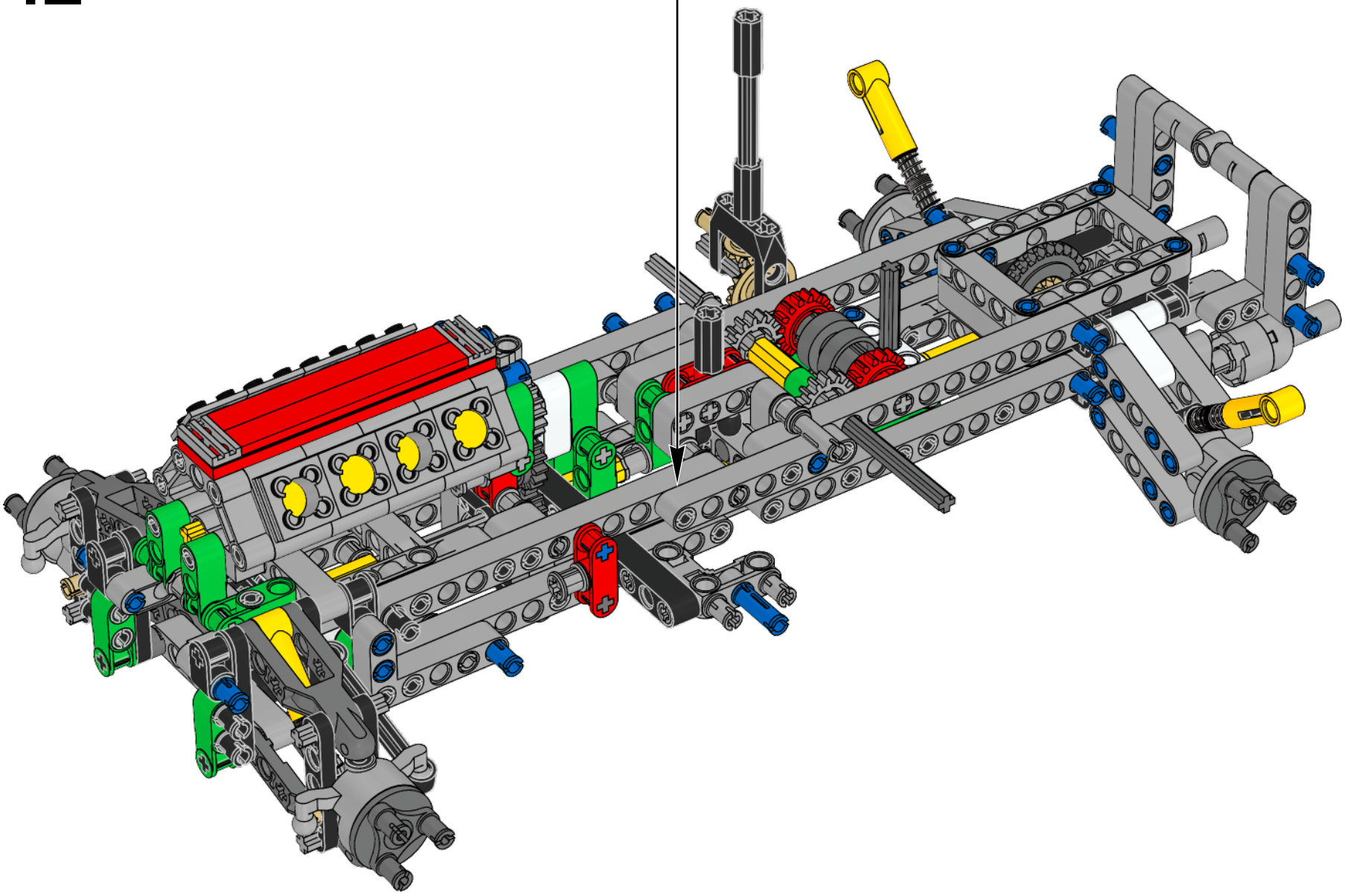

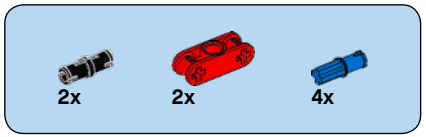

143

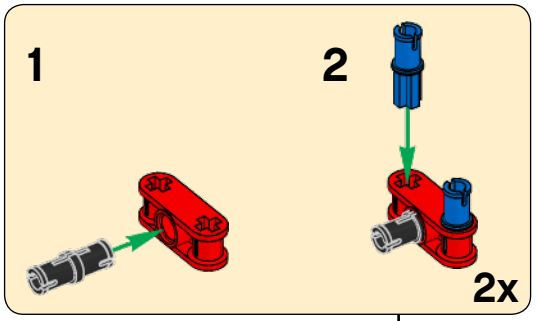

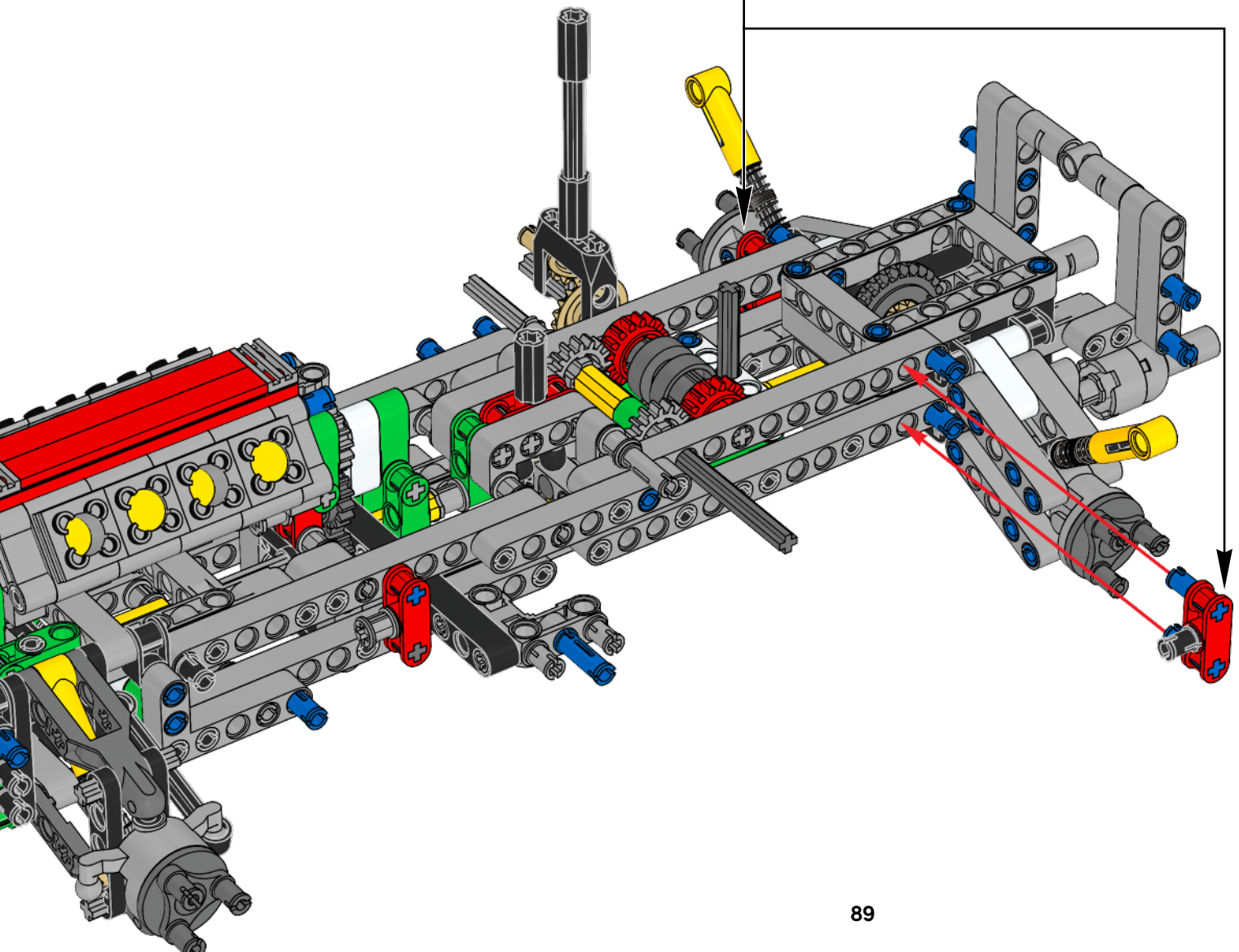

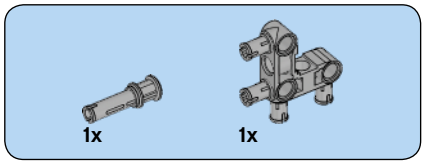

144

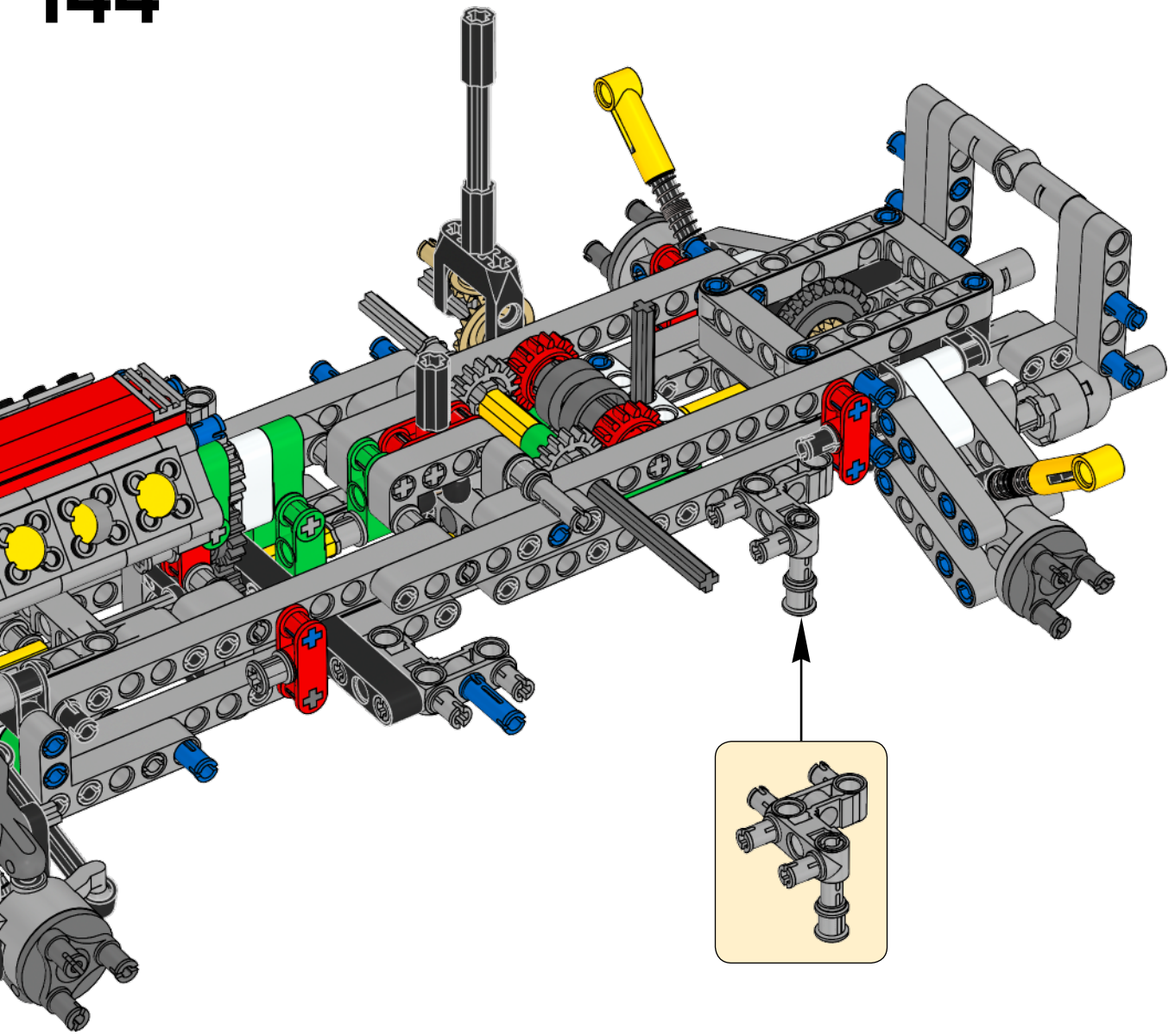

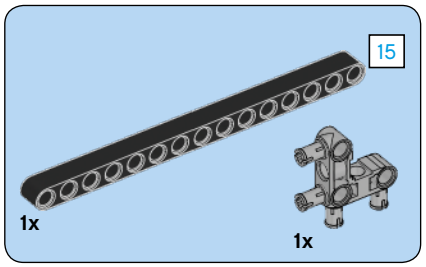

145

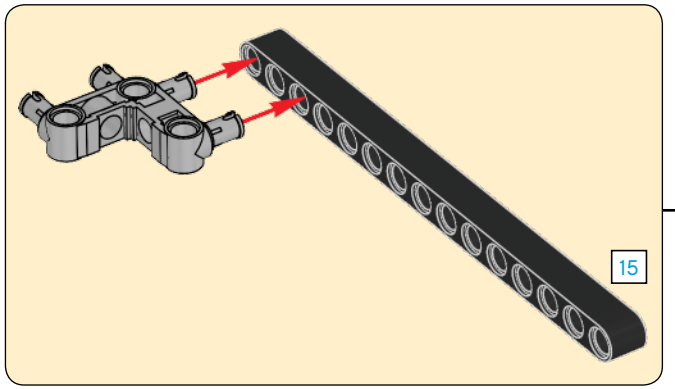

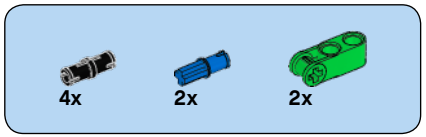

146

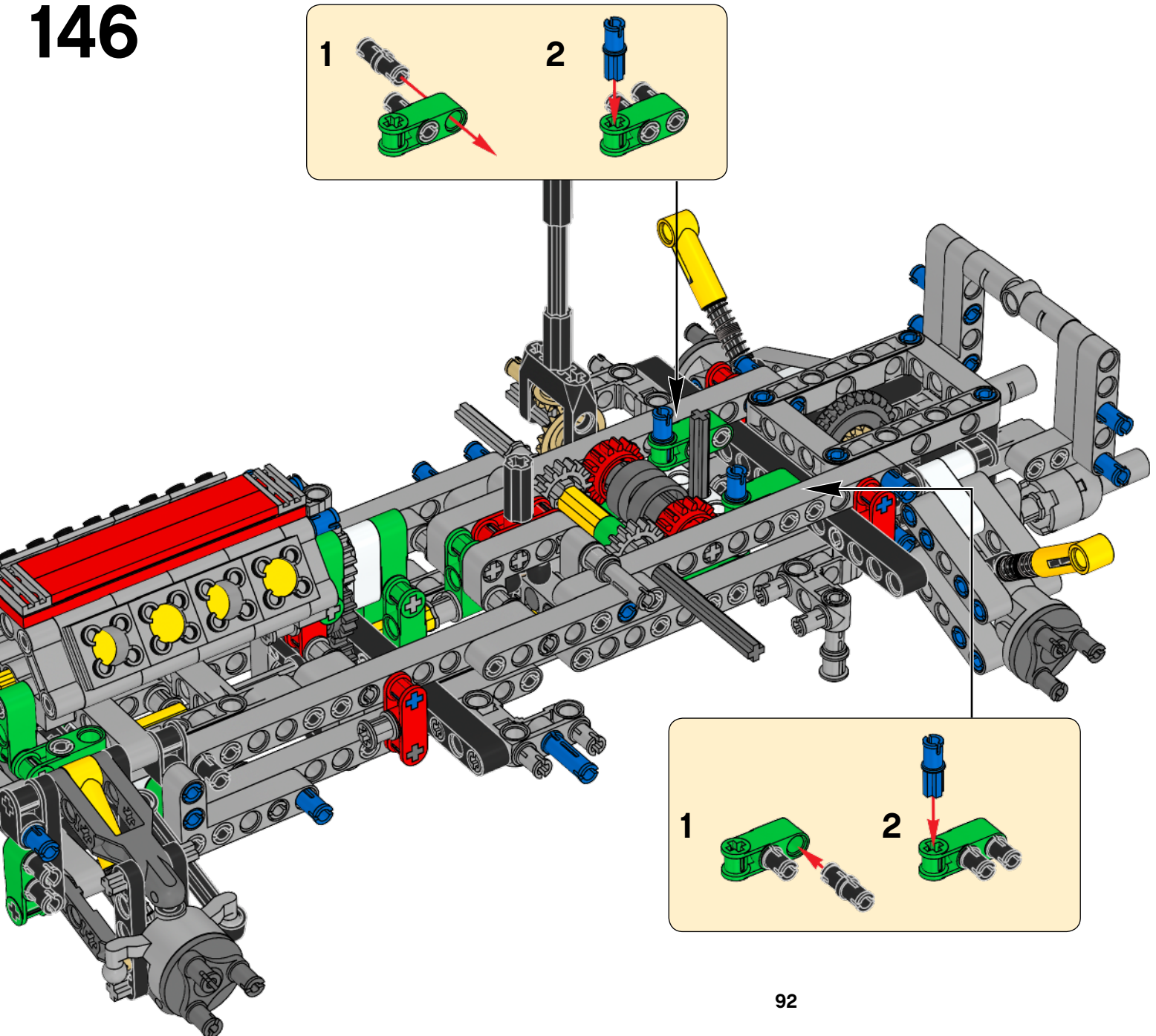

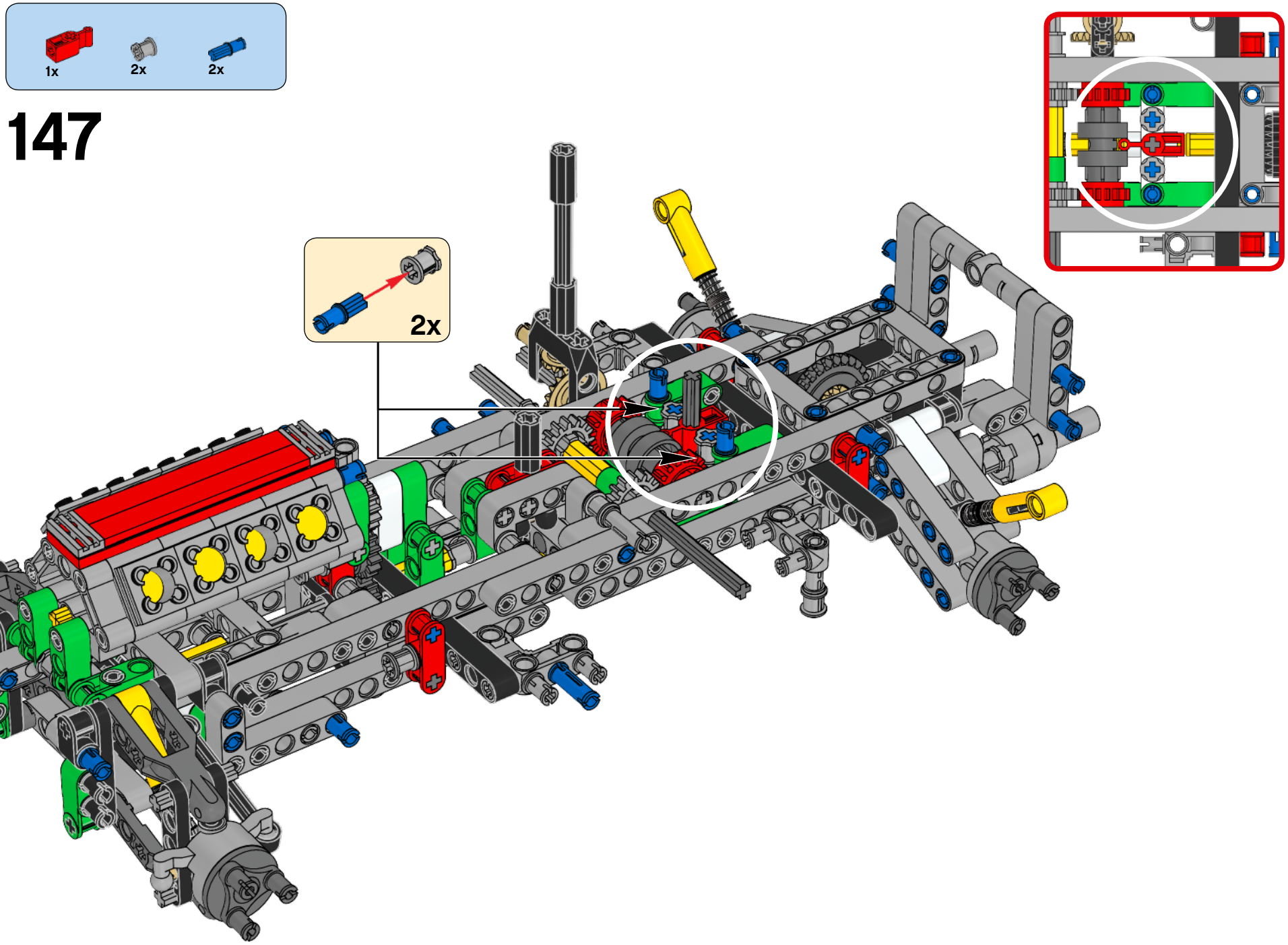
1x
2x
2x
147
2x

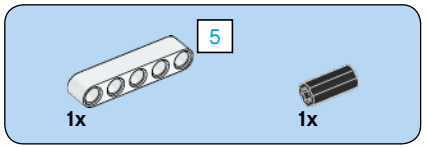

148

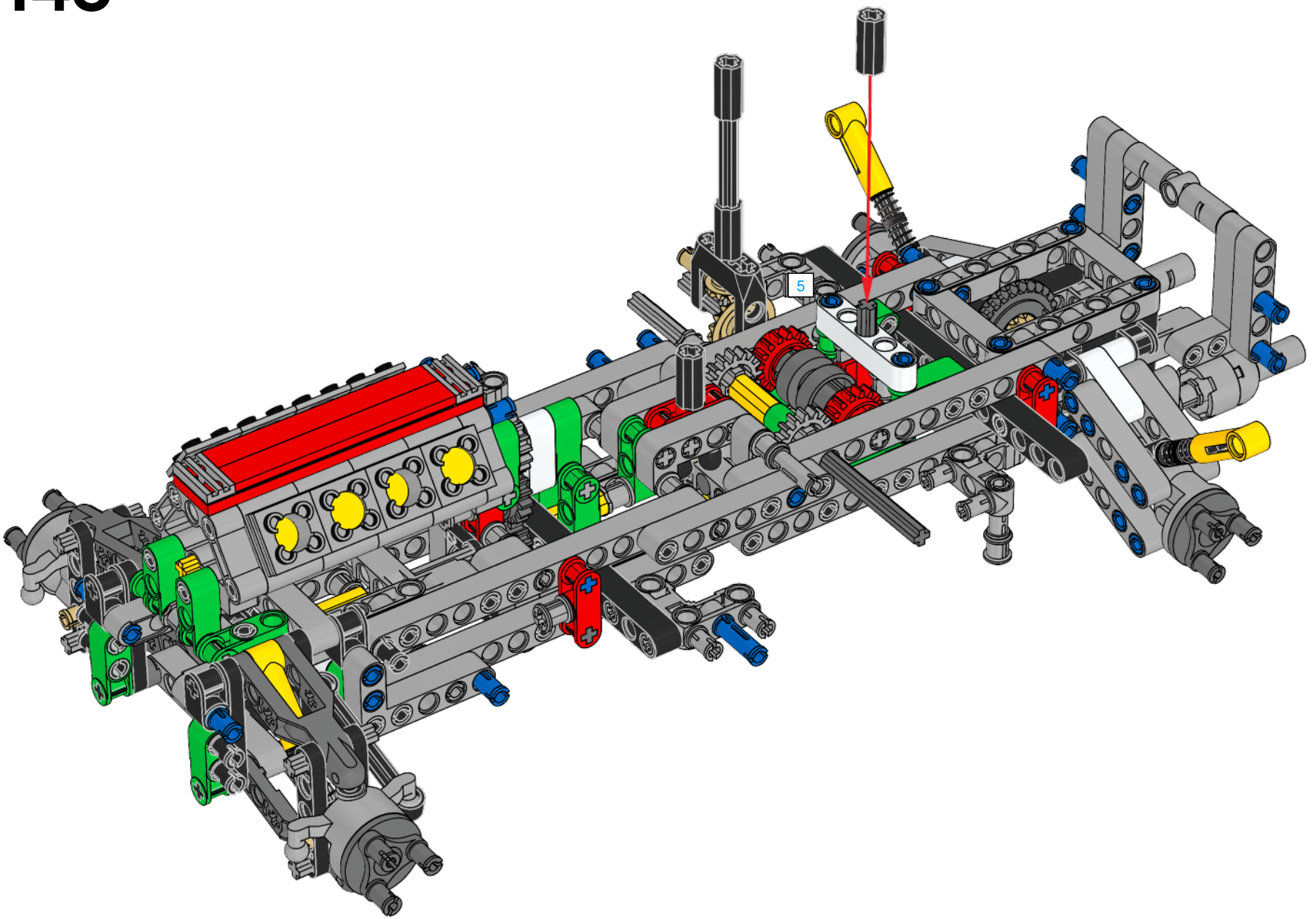

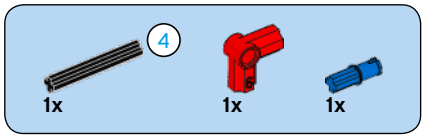

149

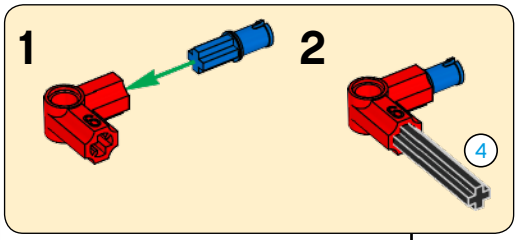

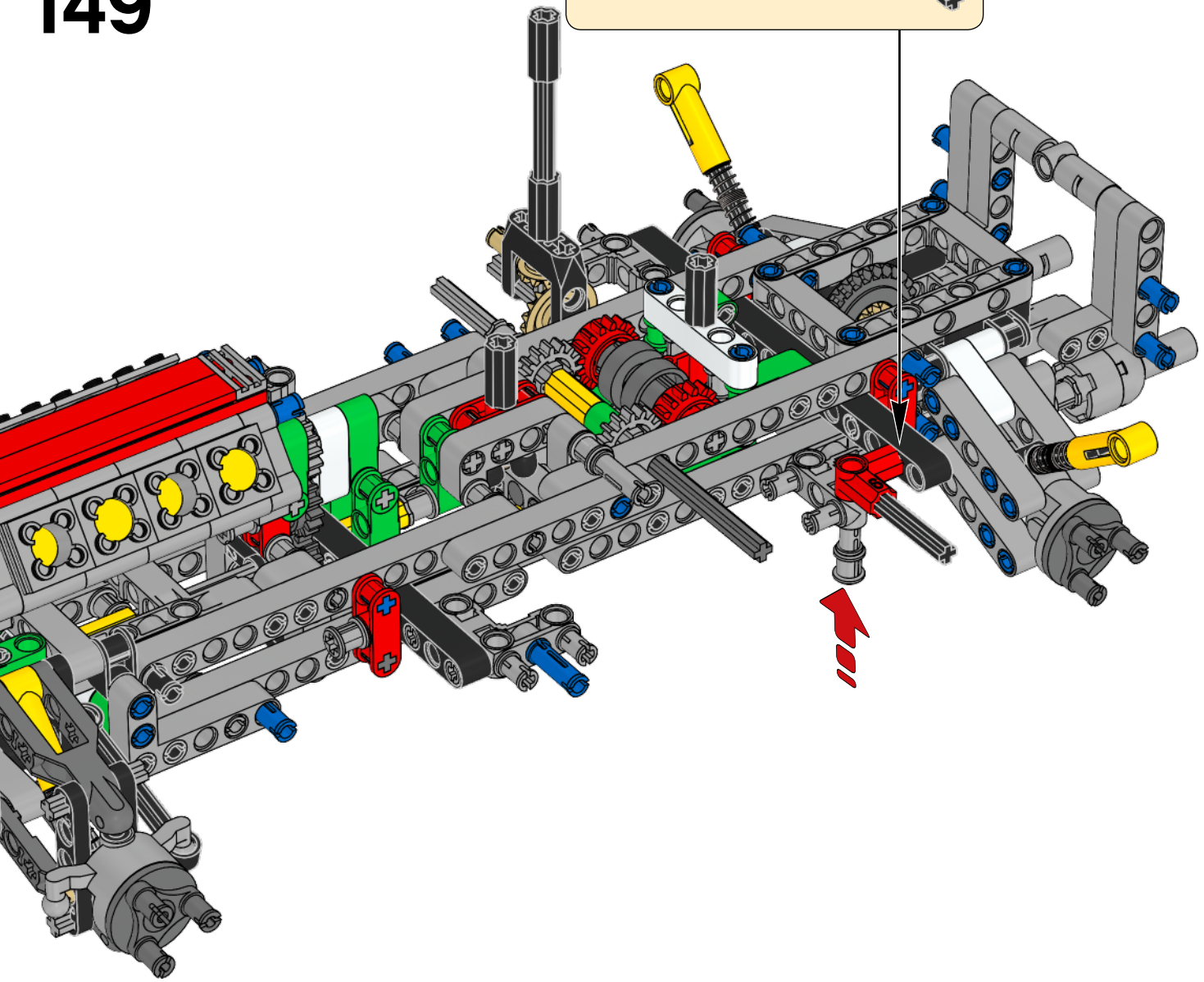

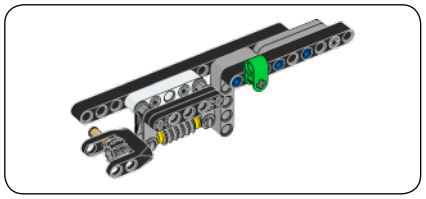

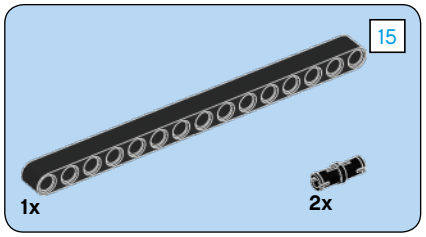

150

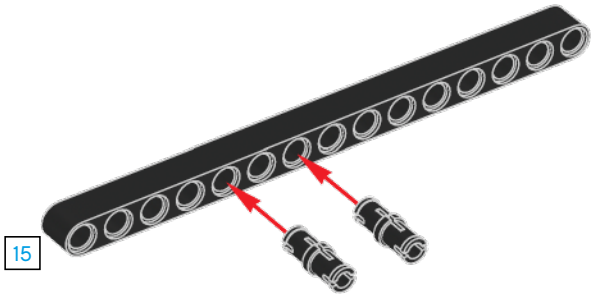

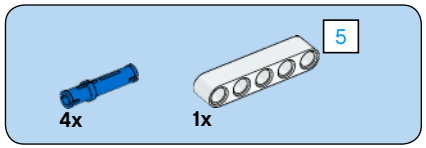

151

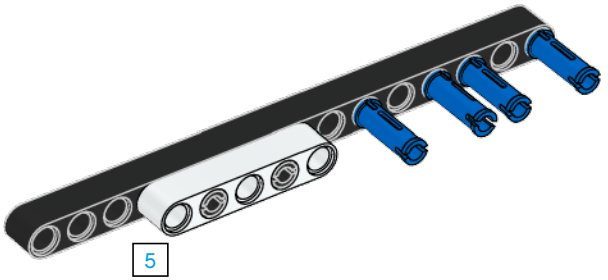

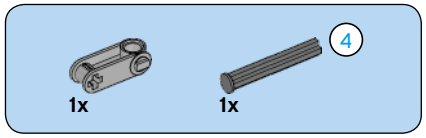

152

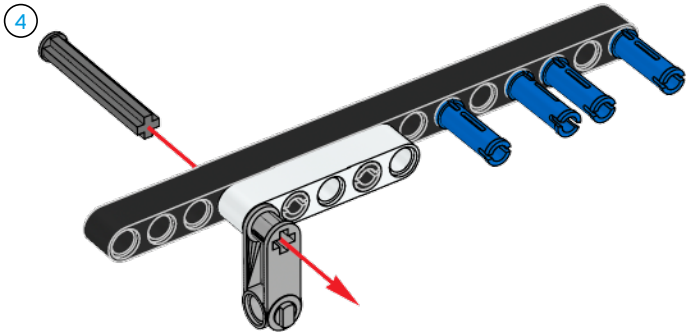

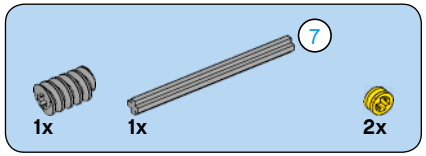

153

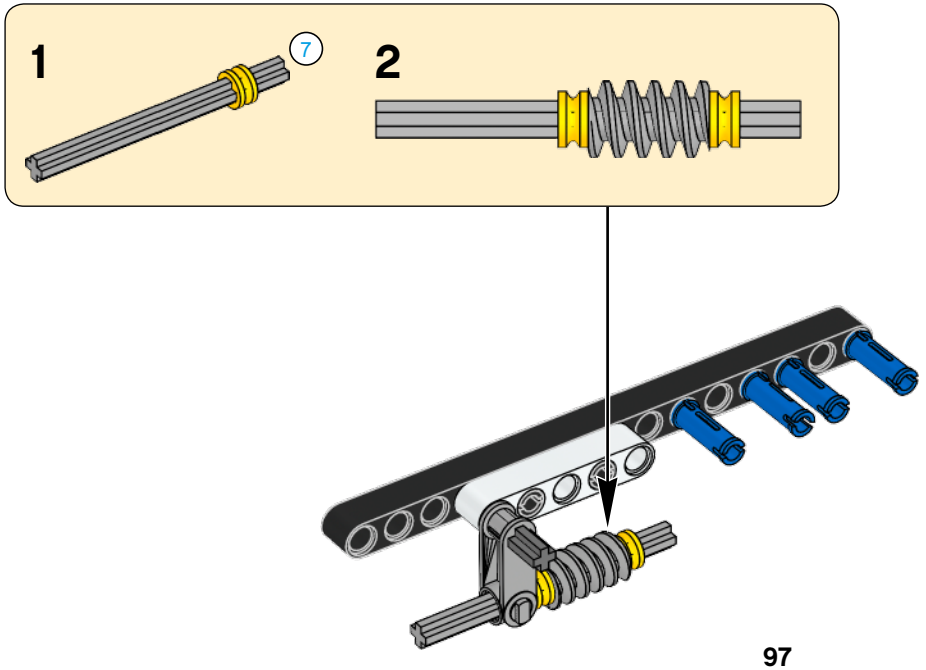

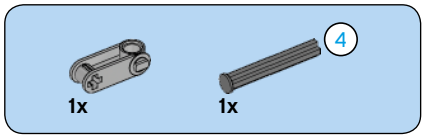

154

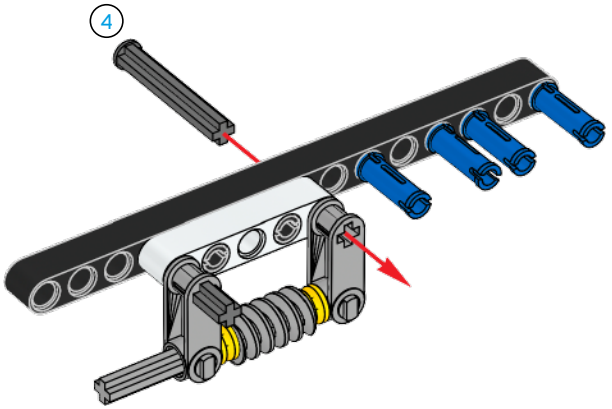

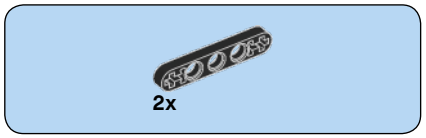

155

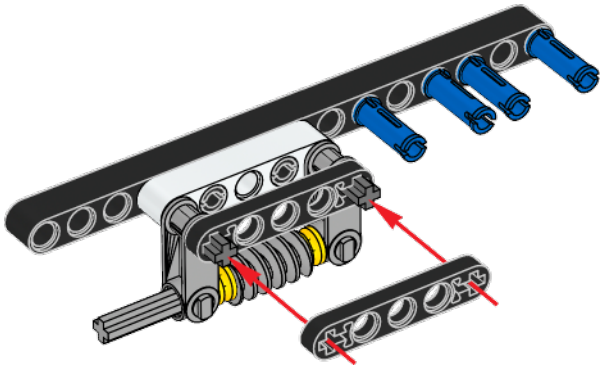

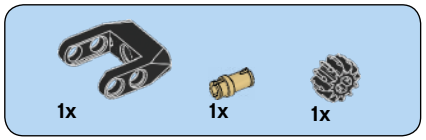

156

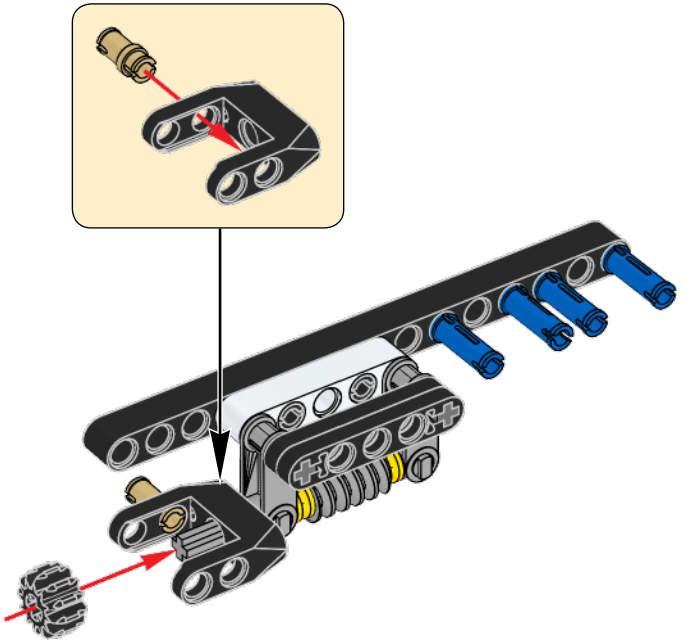

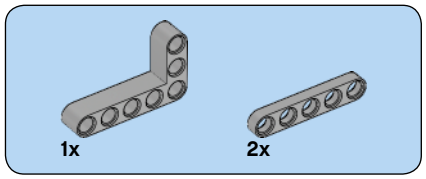

157

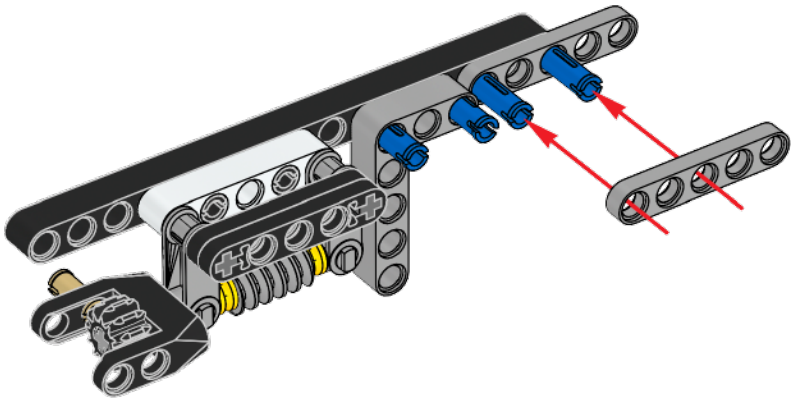

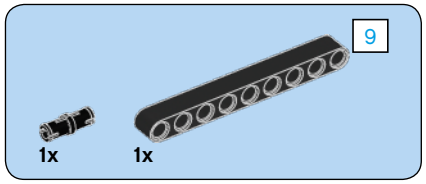

158

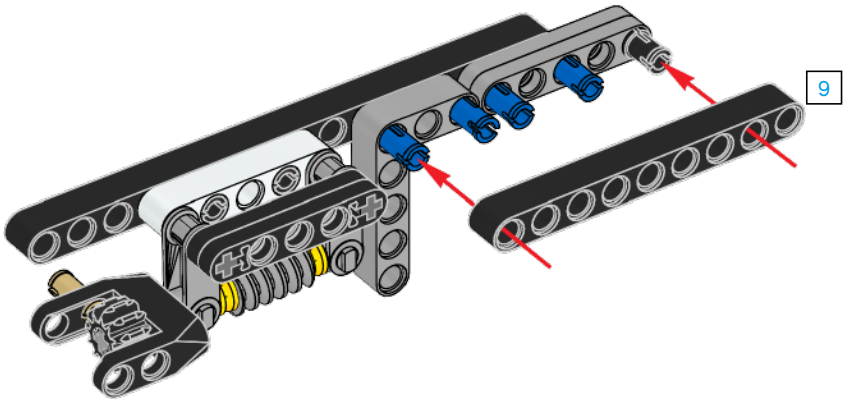

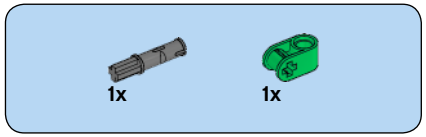

159

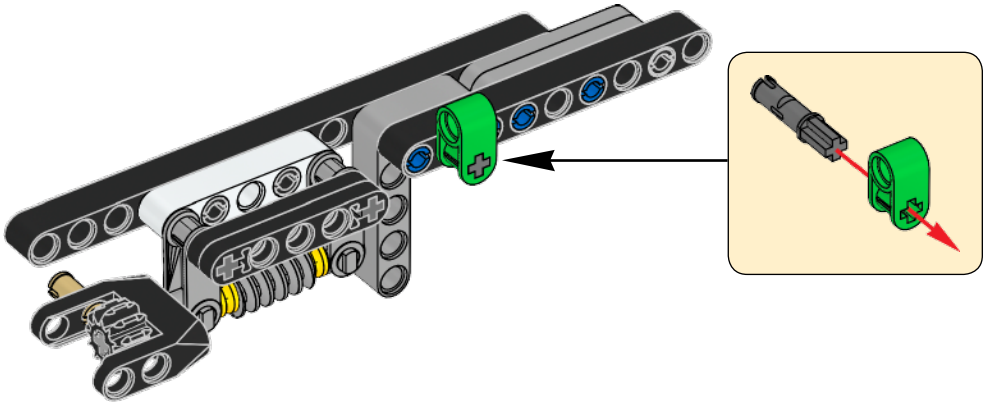

1x

160

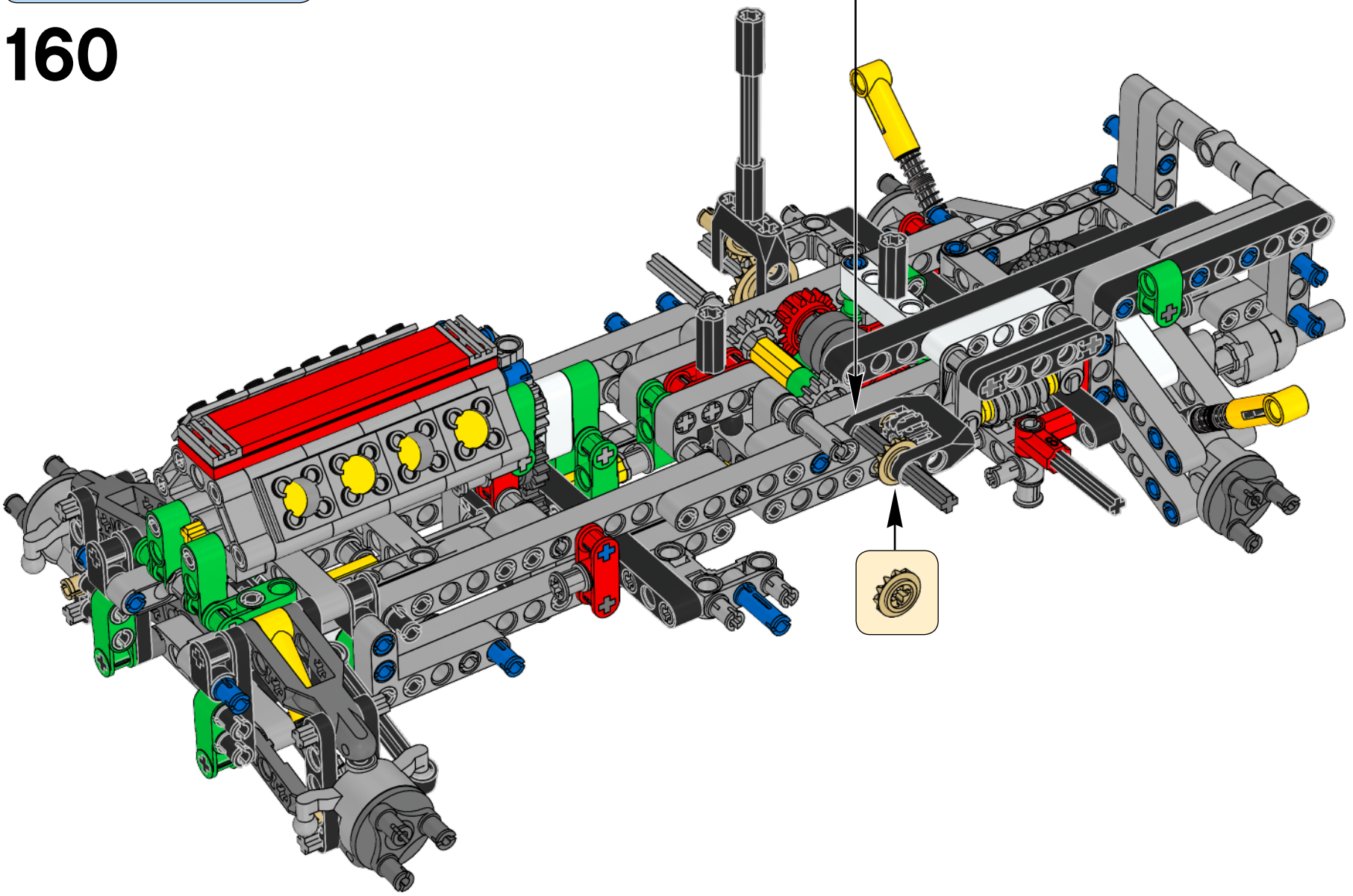

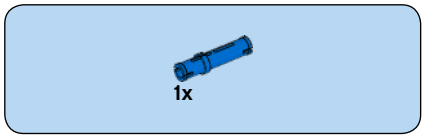

161

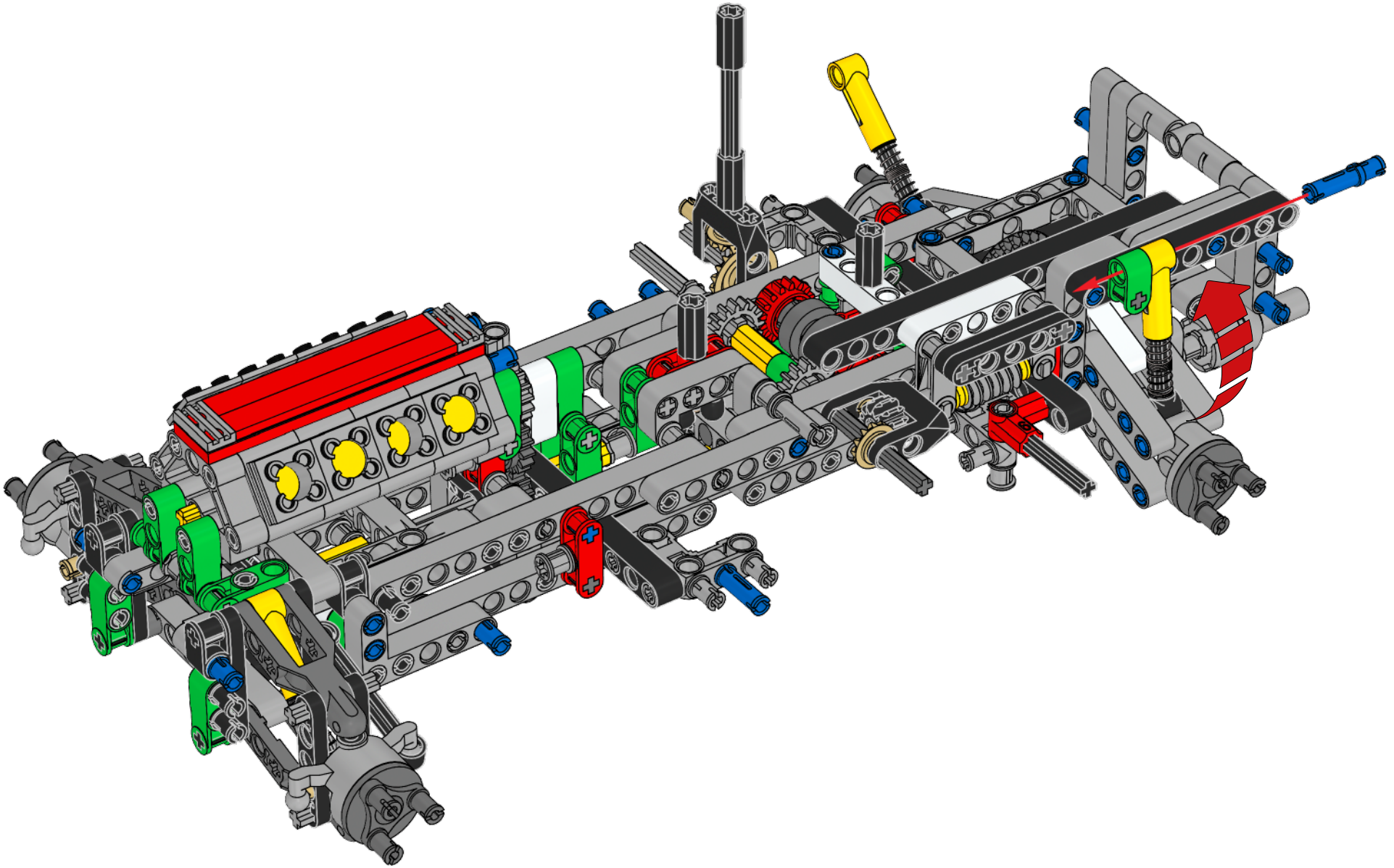

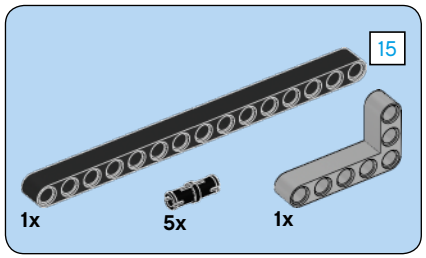

162

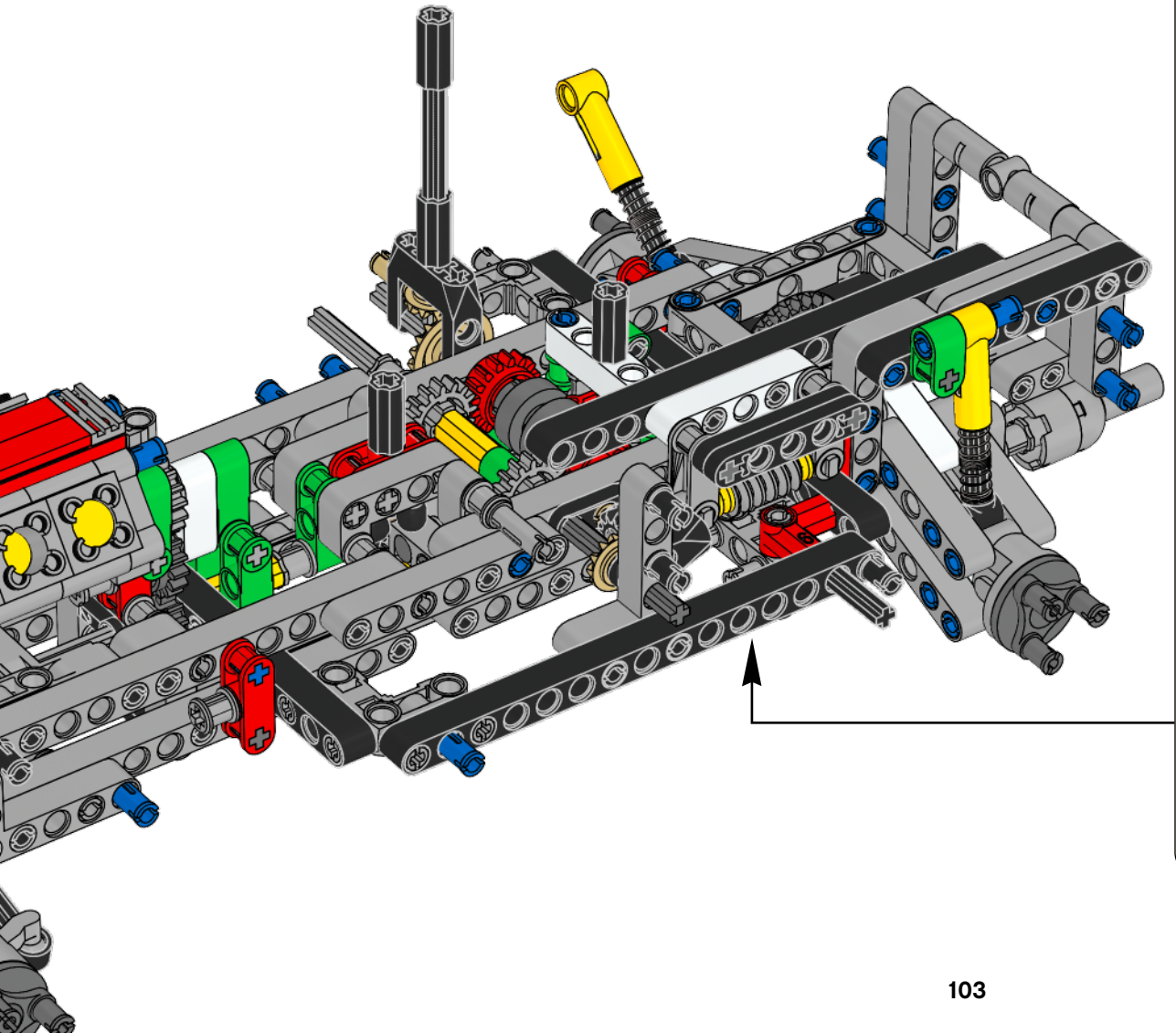

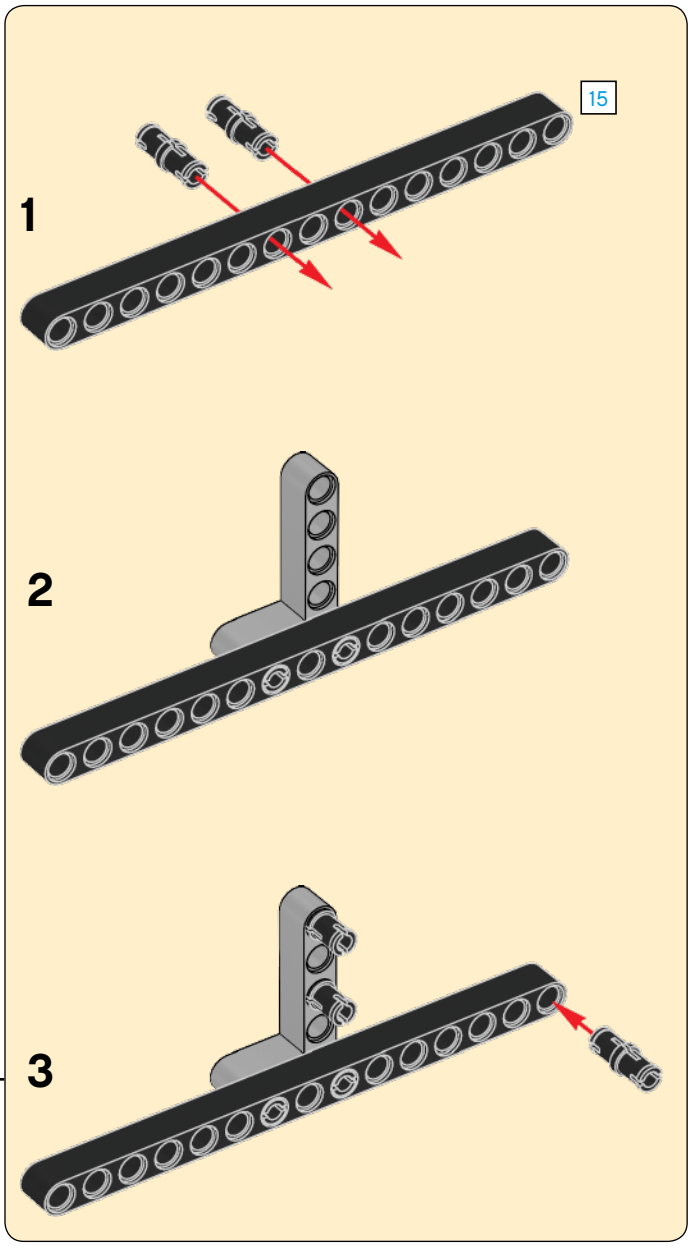

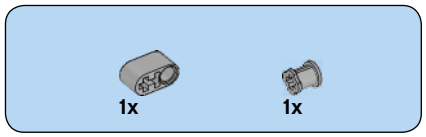

163

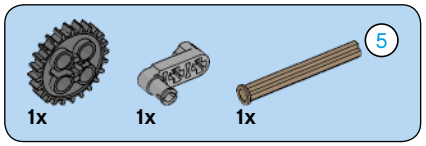

164

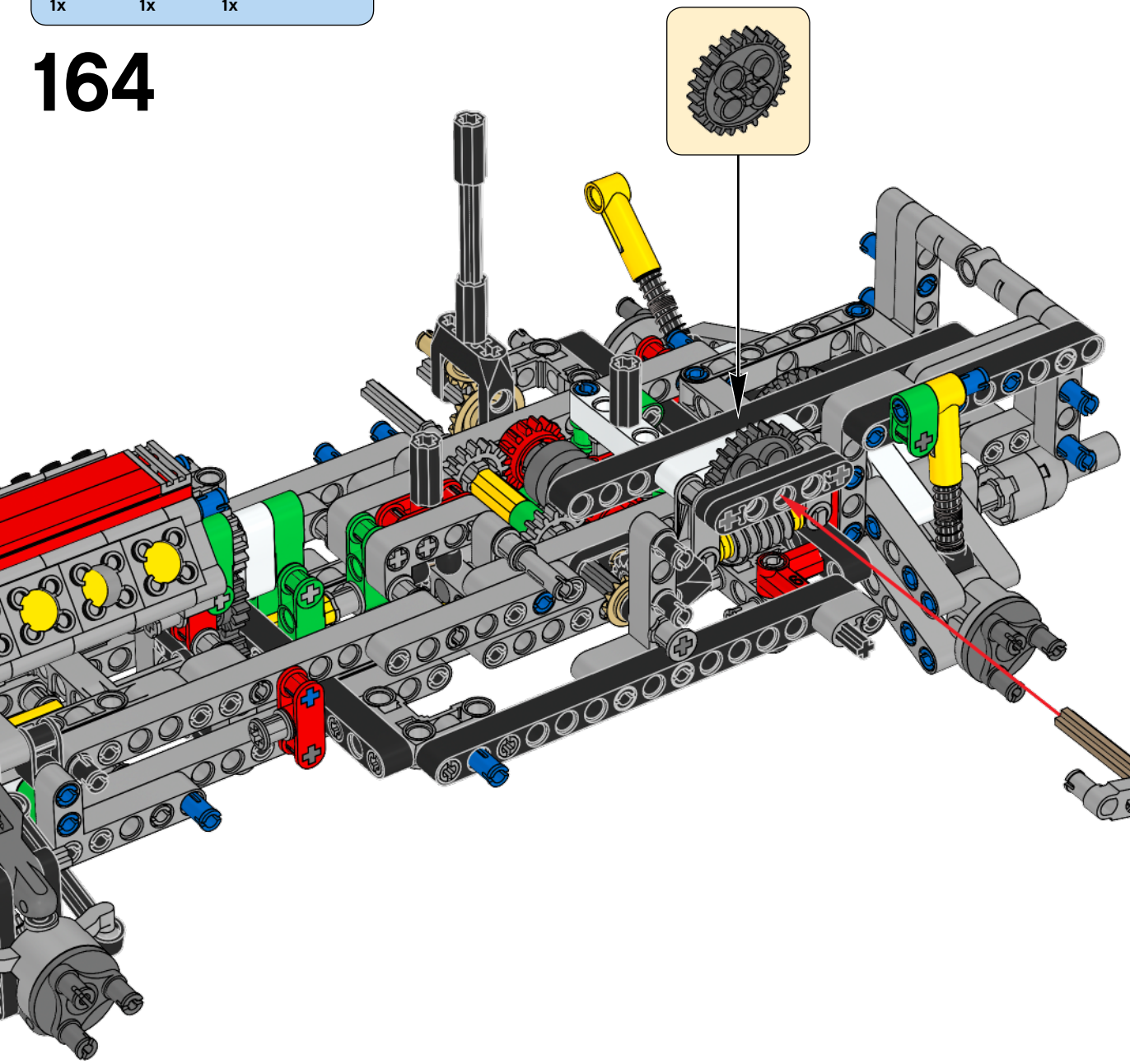

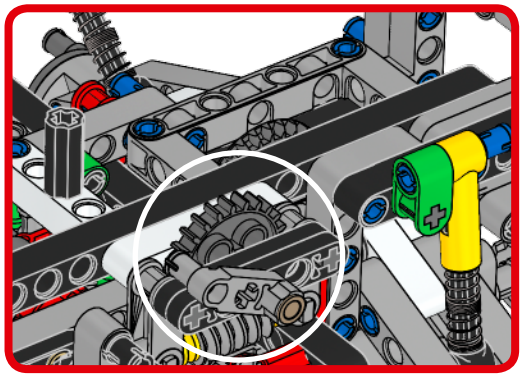

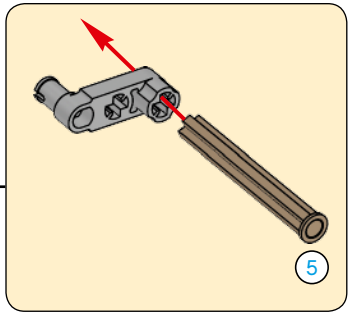

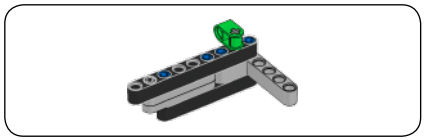

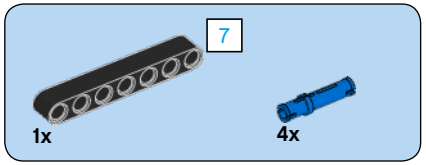

165

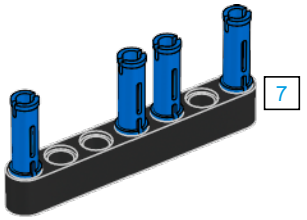

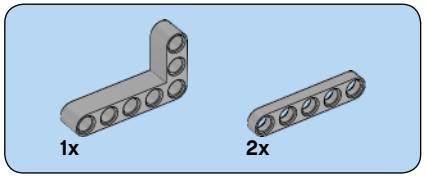

166

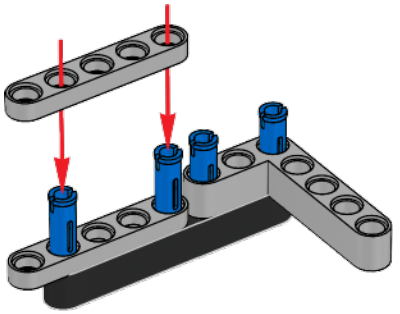

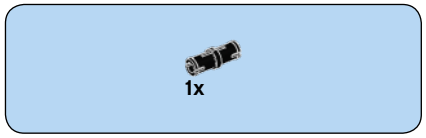

167

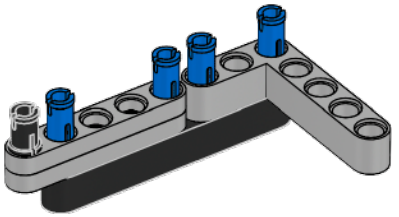

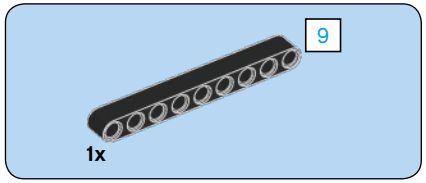

168

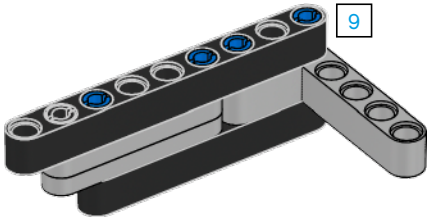

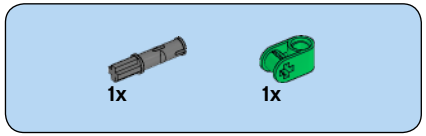

169

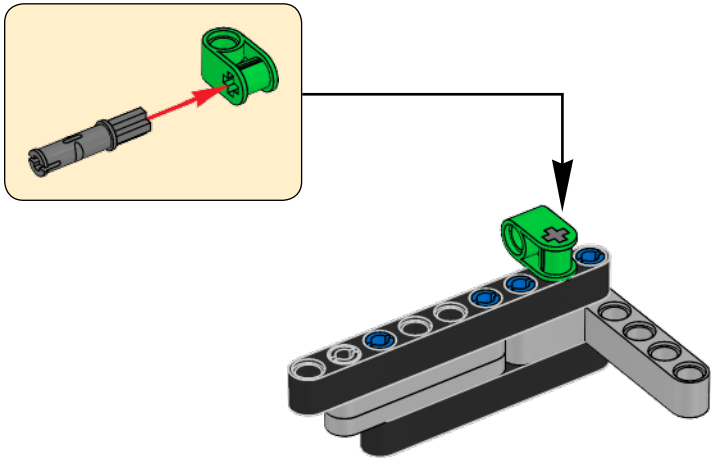

170

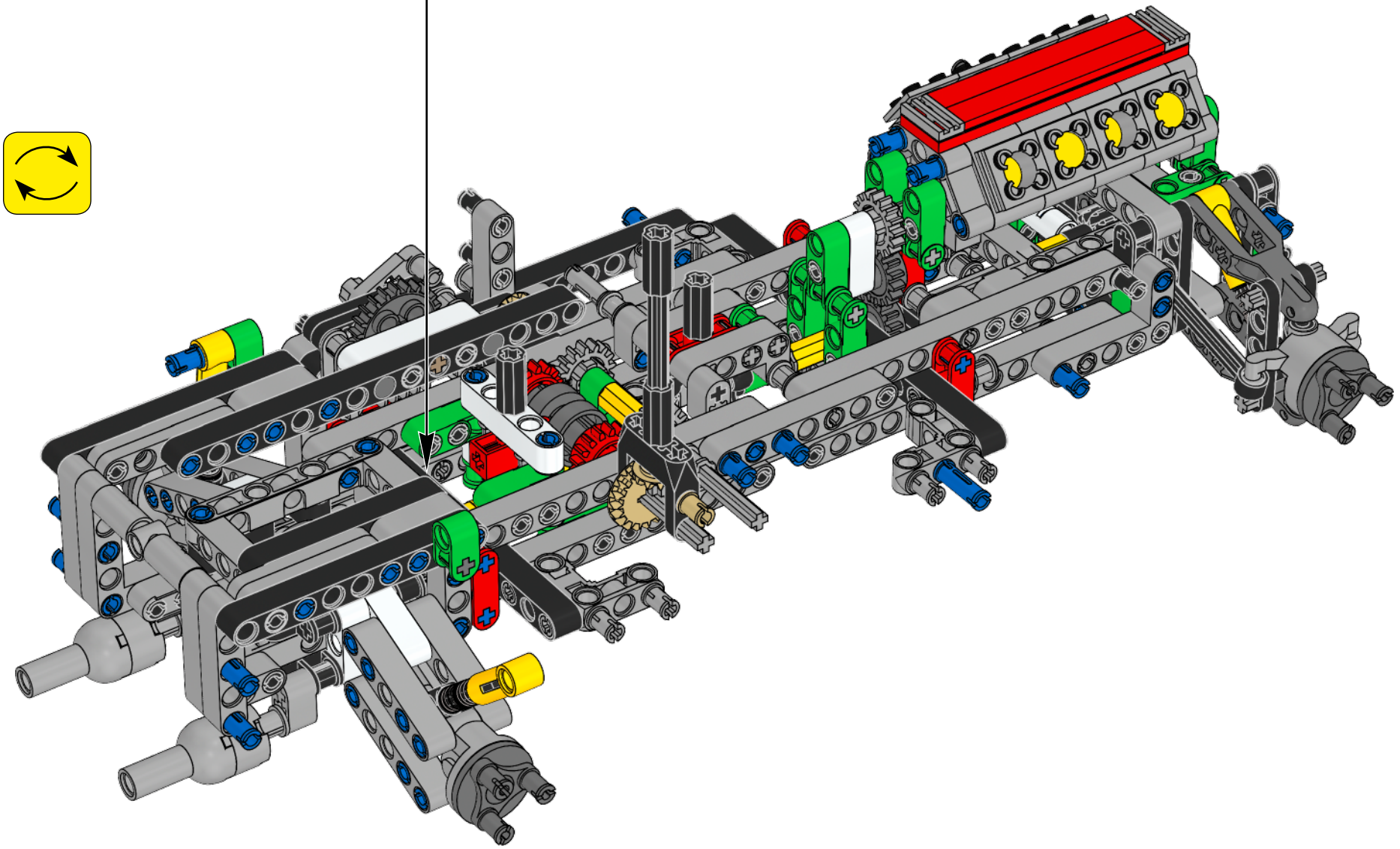

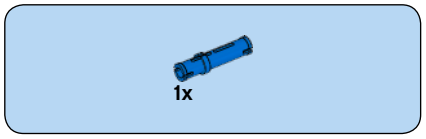

171

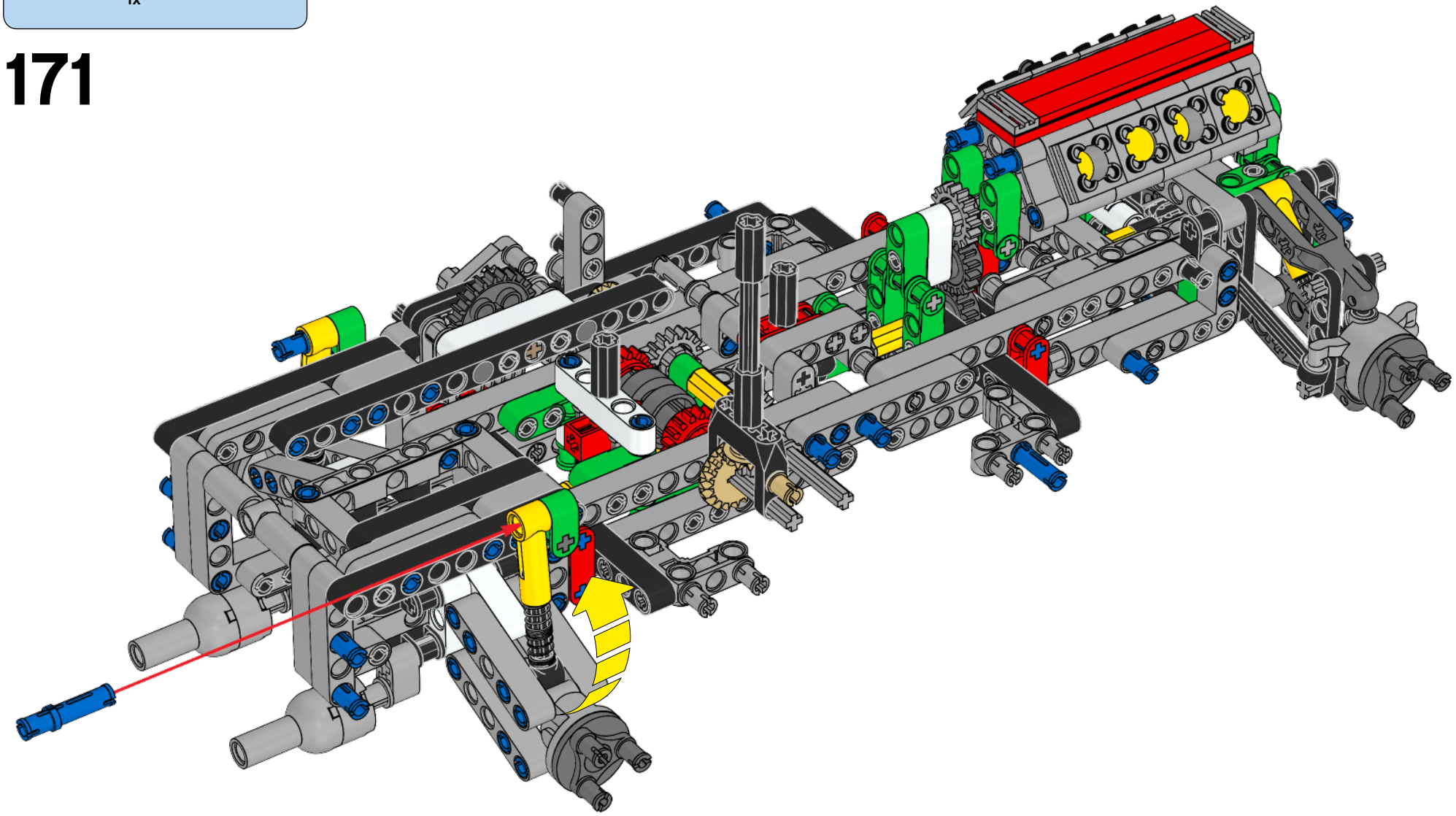

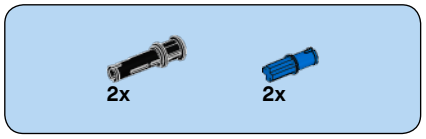

172

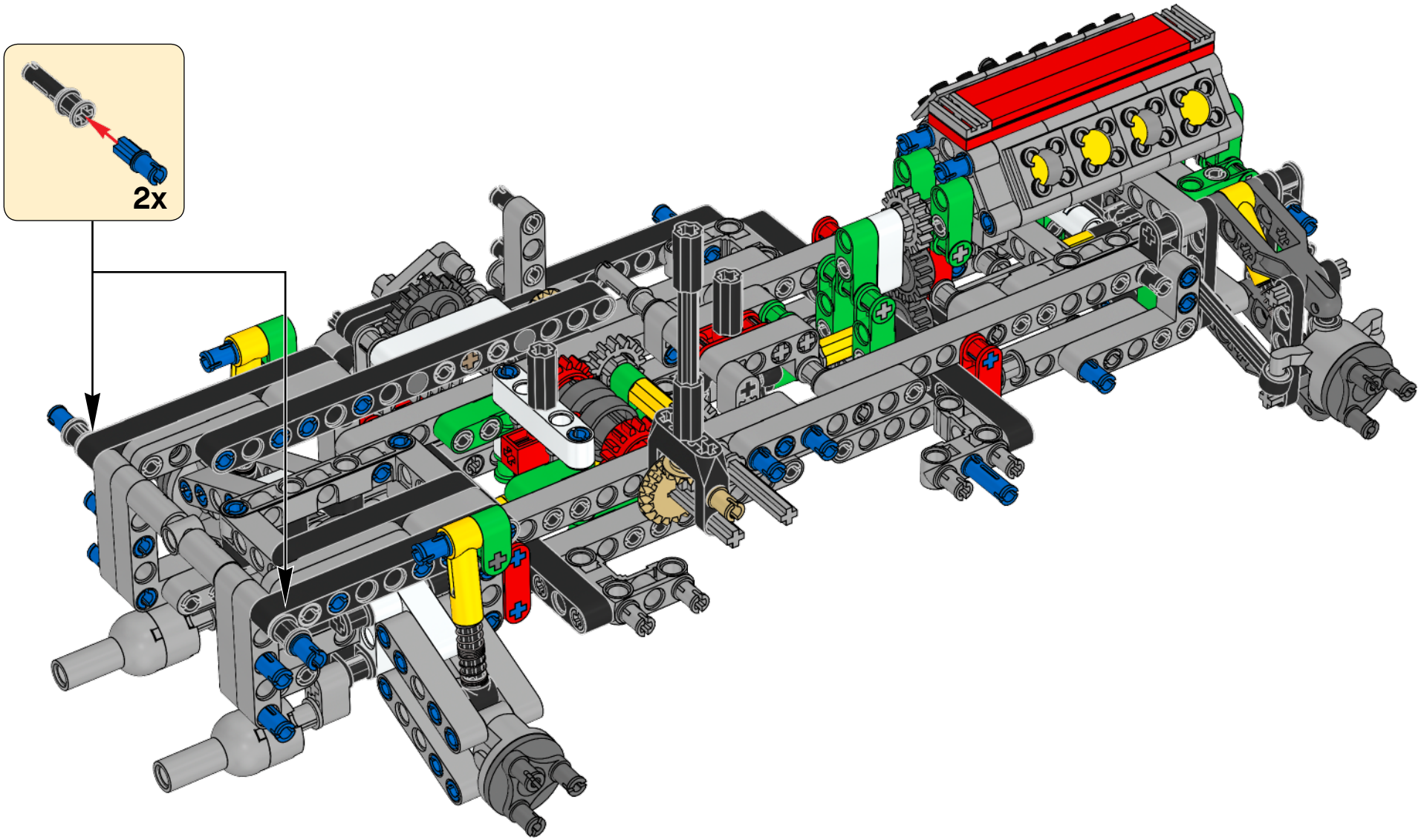

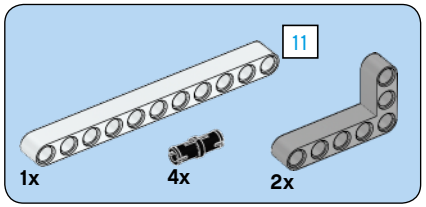

173

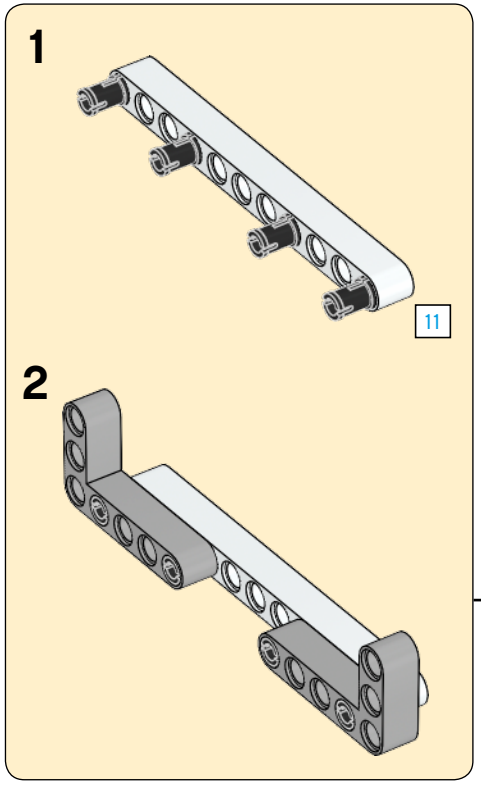

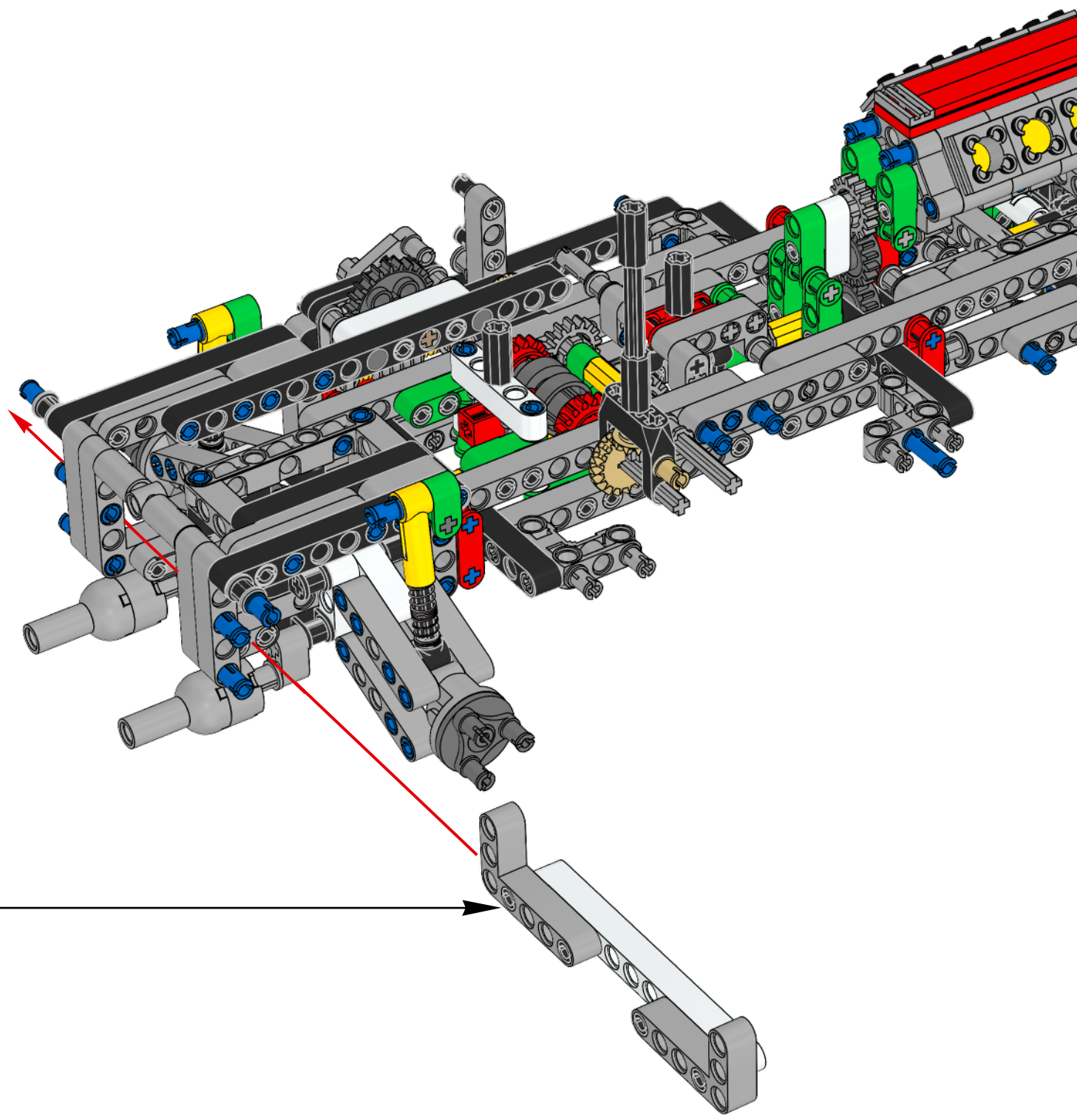

174

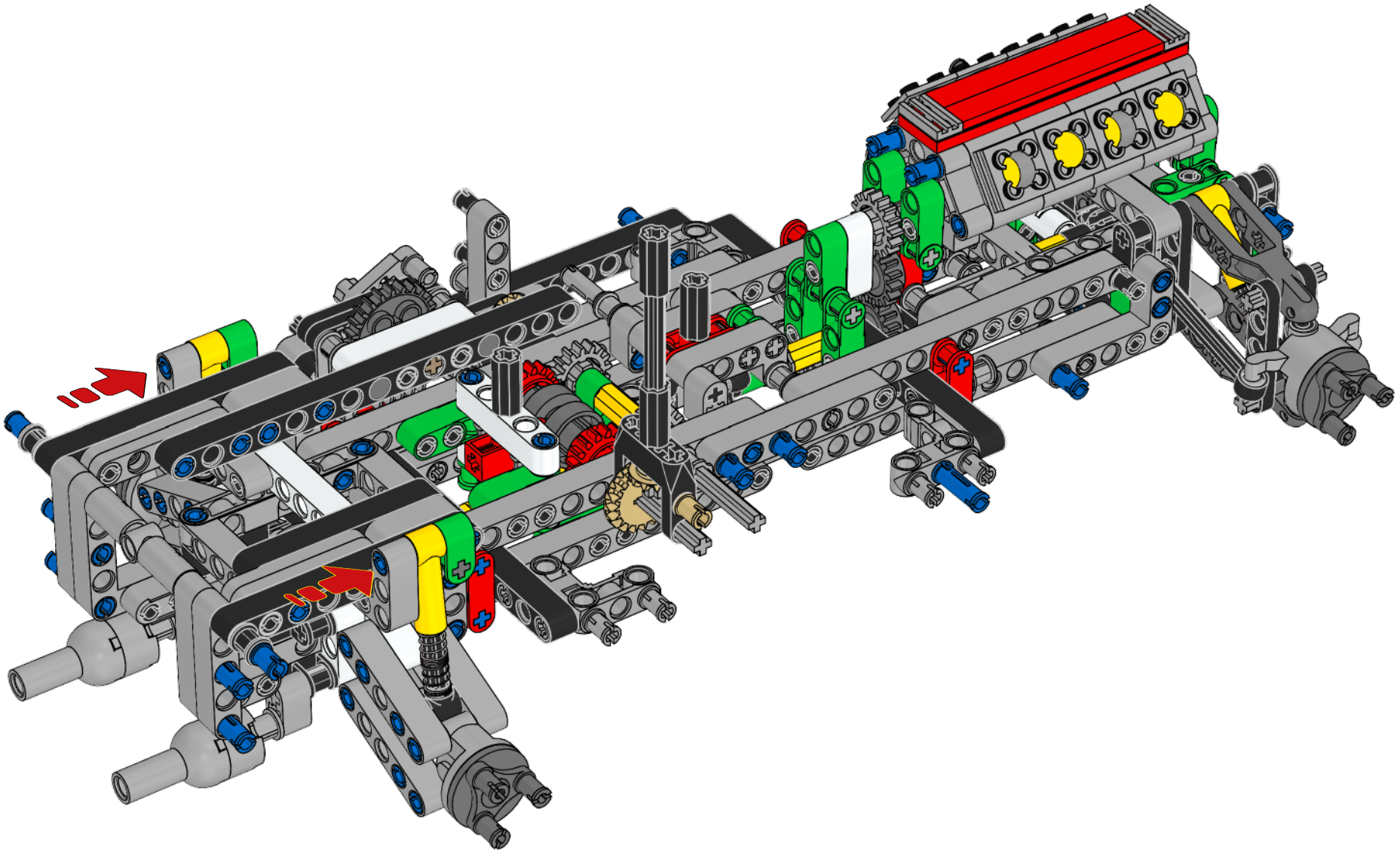

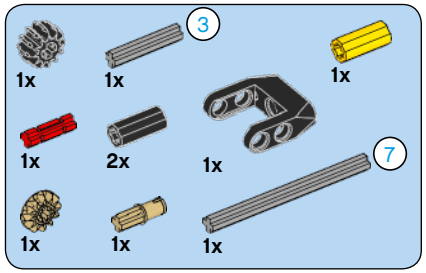

175

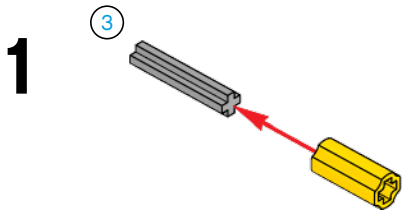

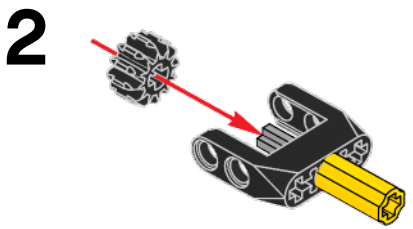

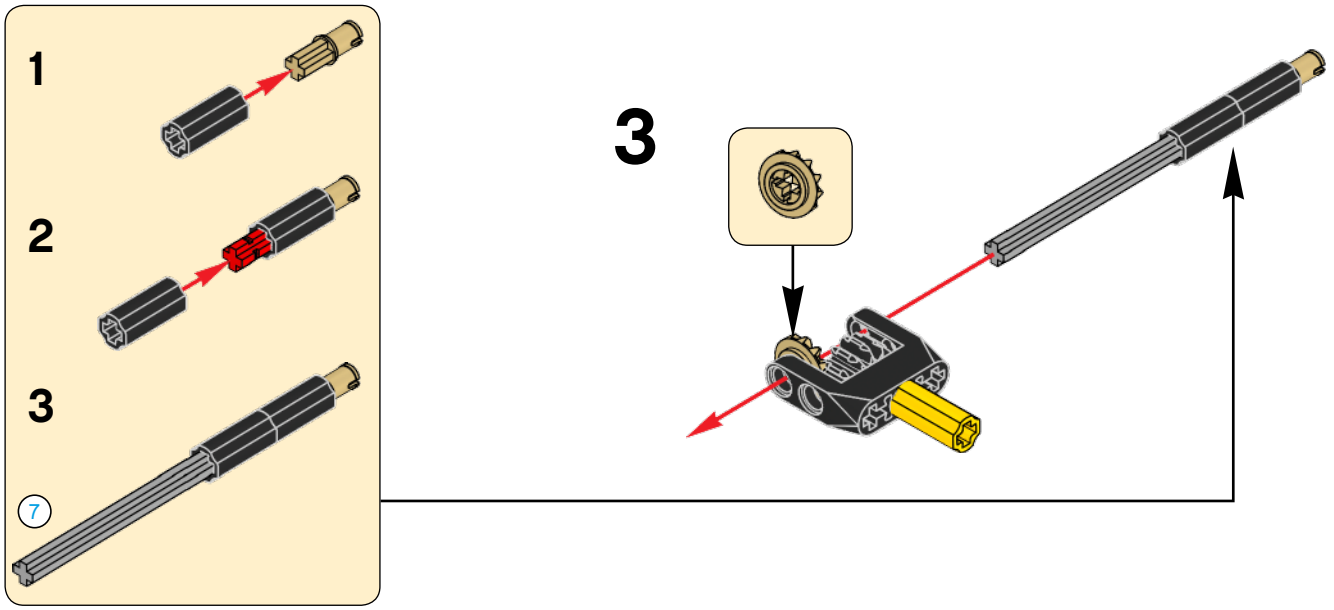

176

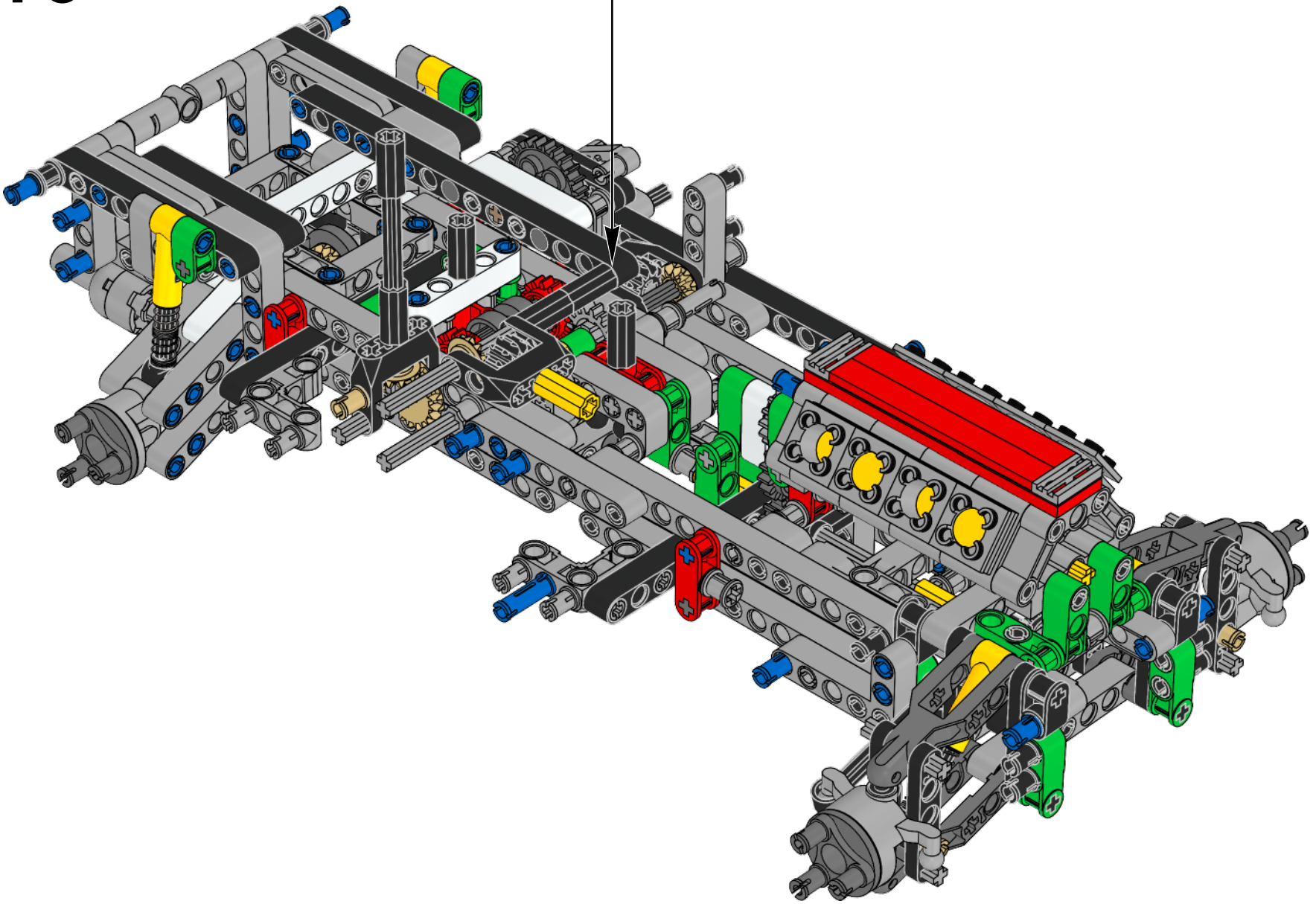

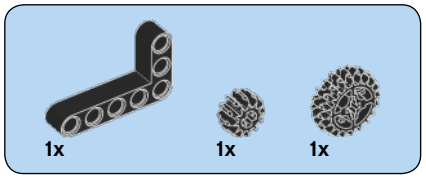

177

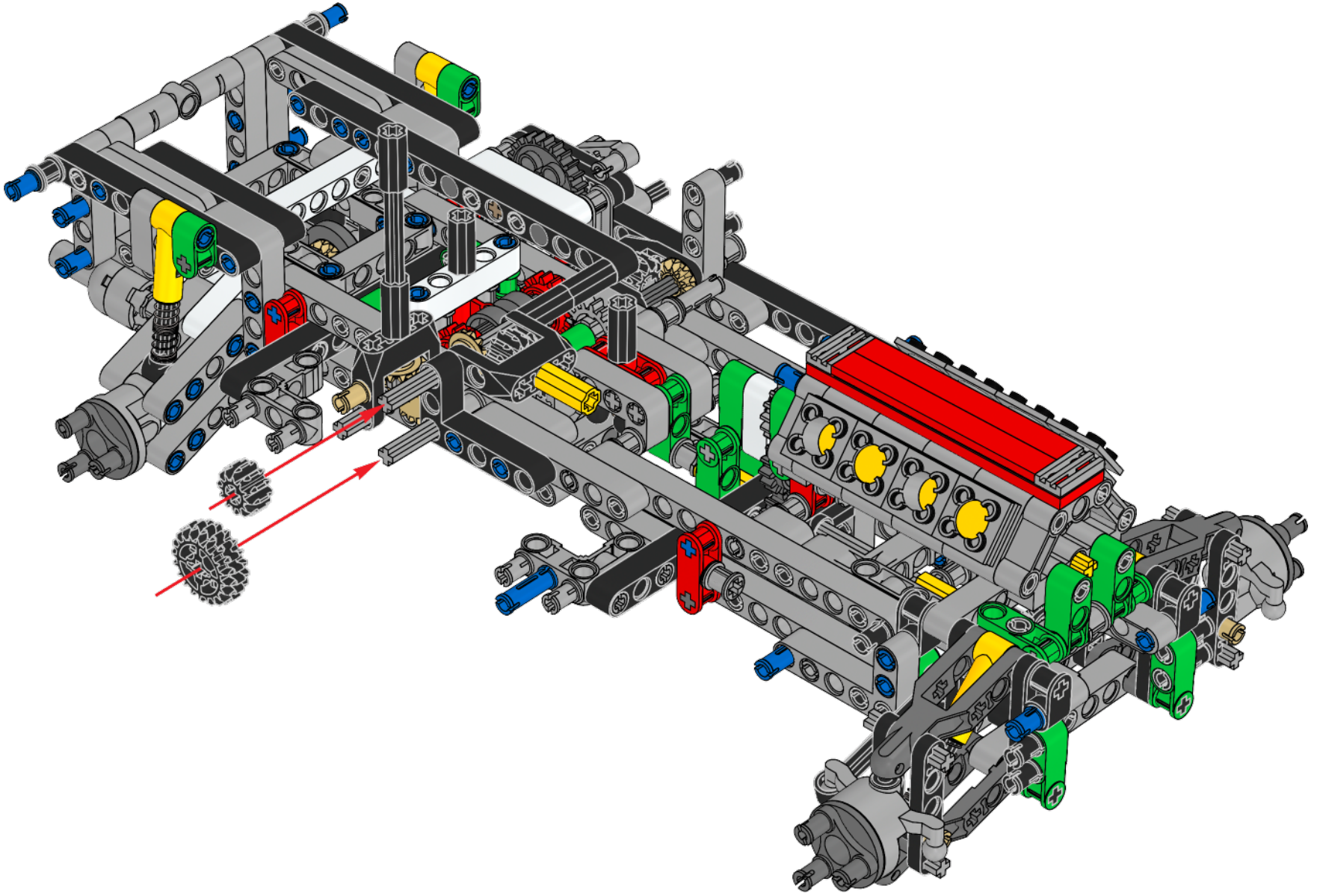

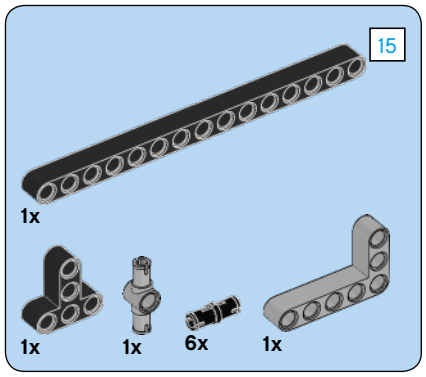

178

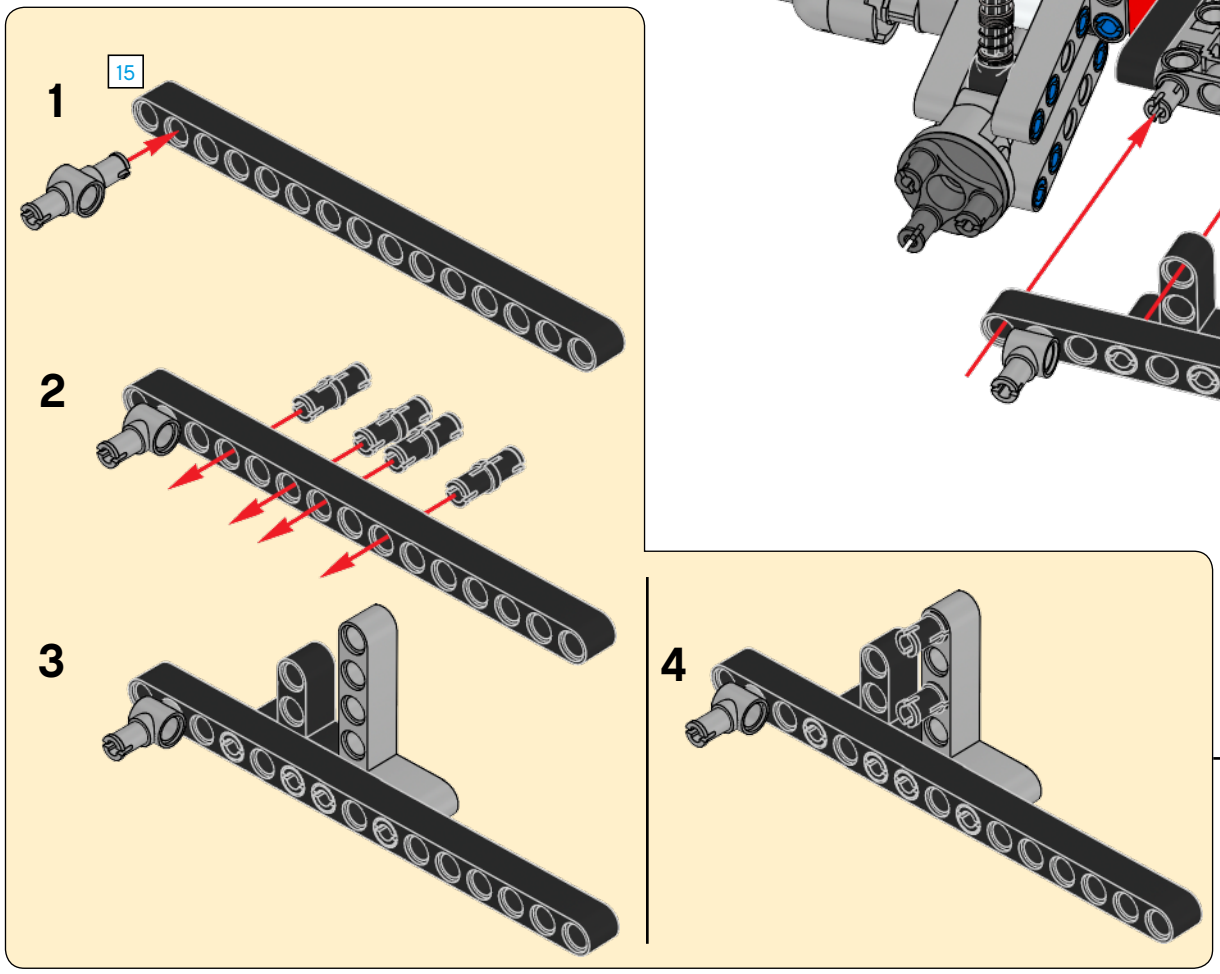

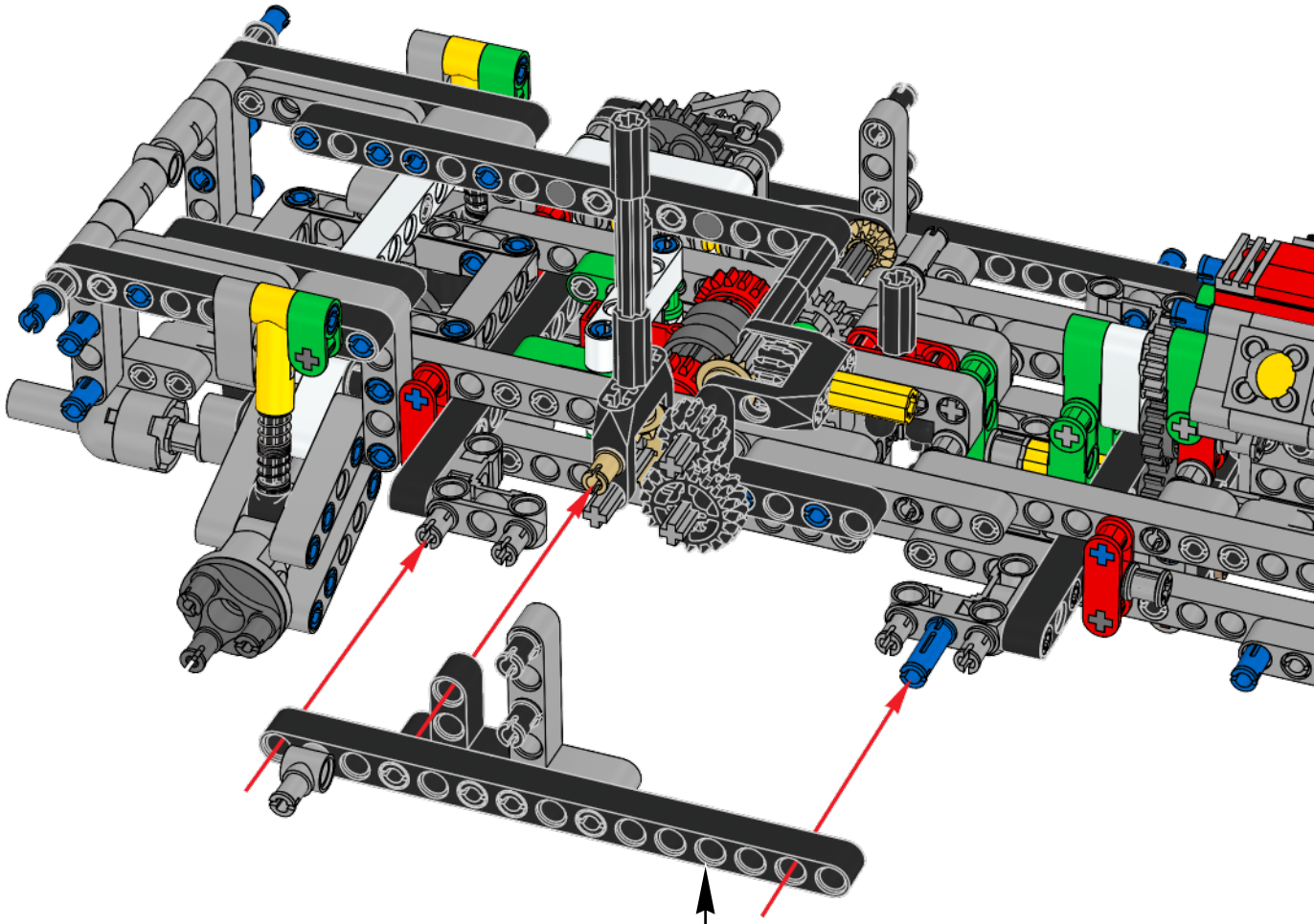

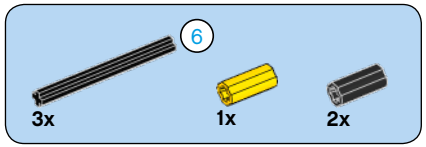

179

1

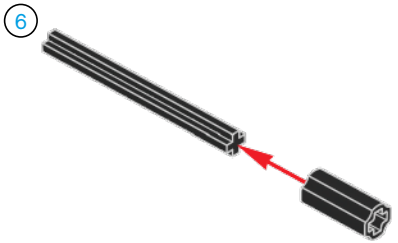

2

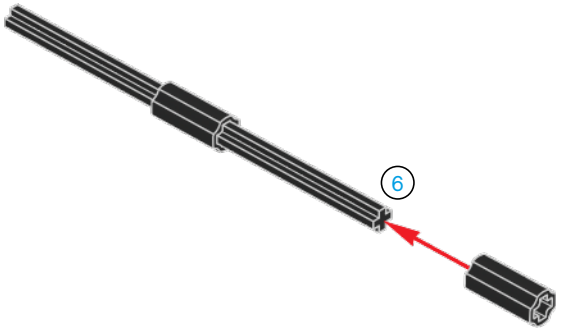

3

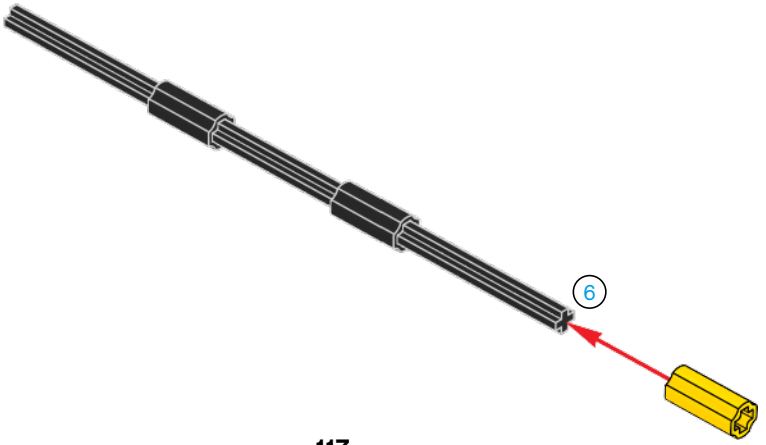

180

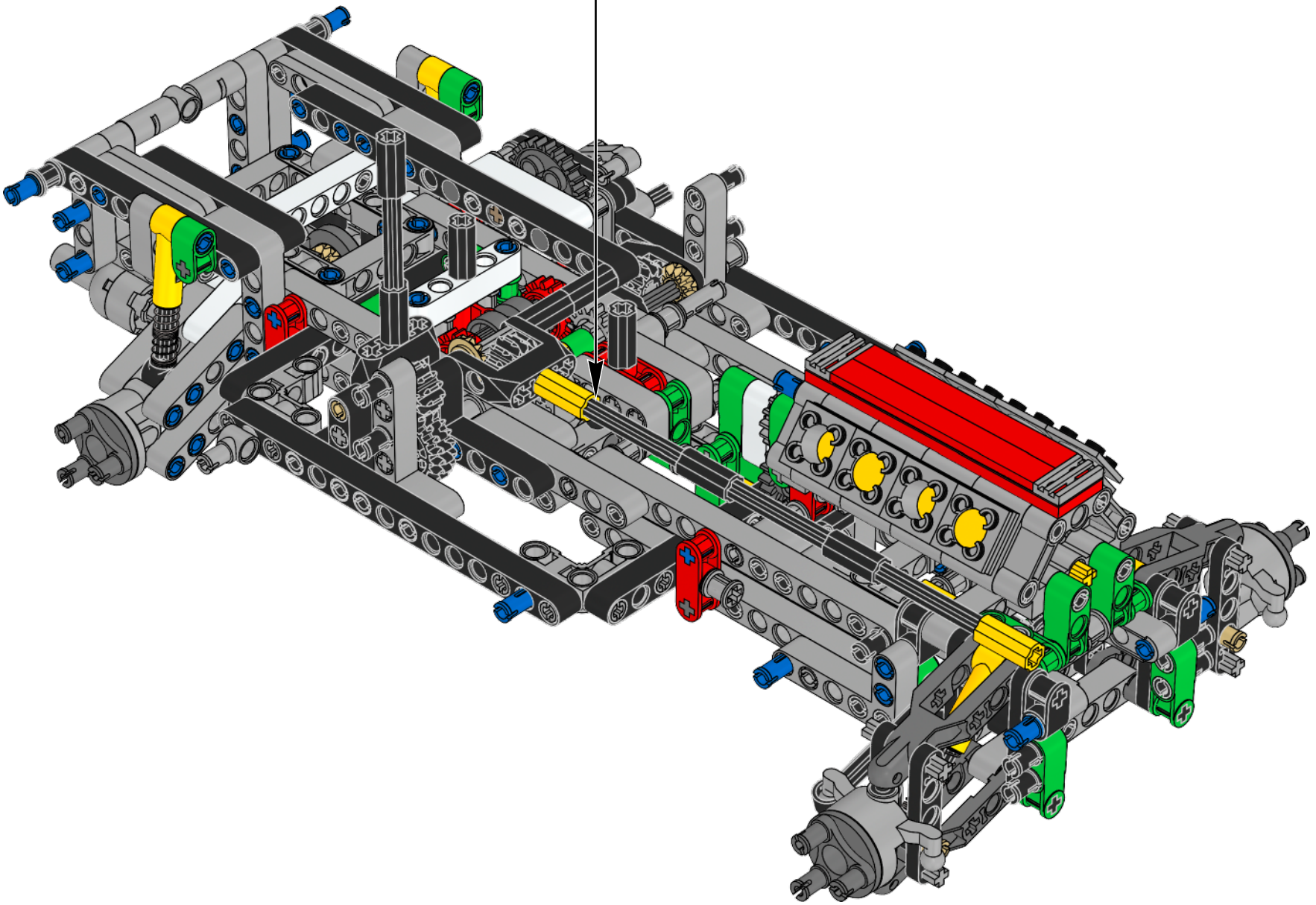

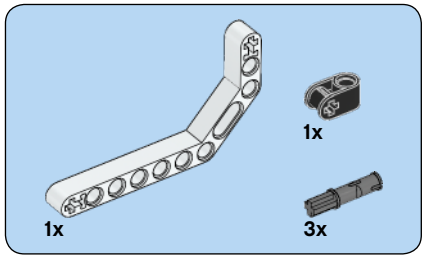

181

1

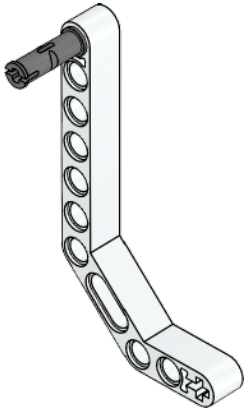

2

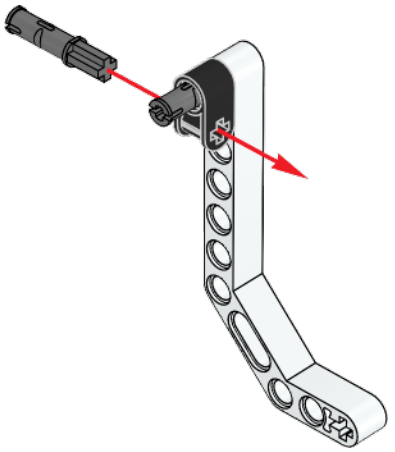

3

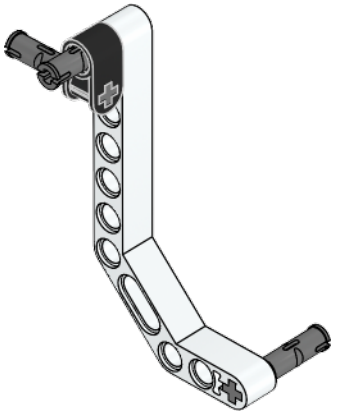

182

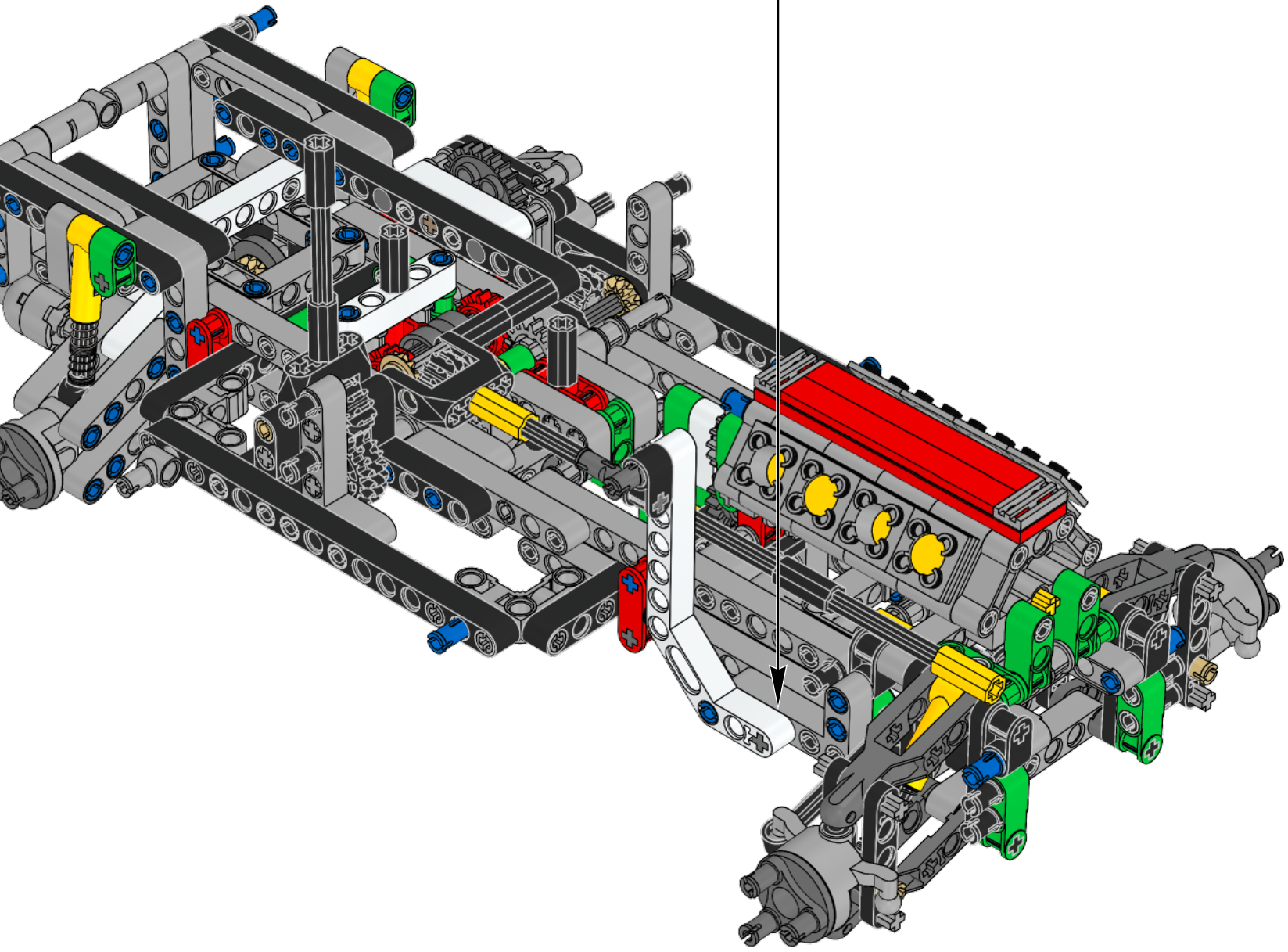

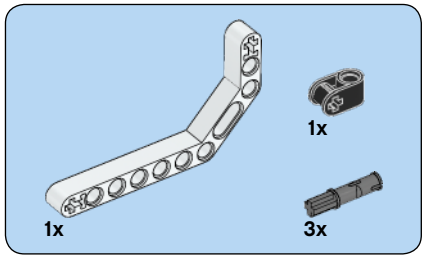

183

1

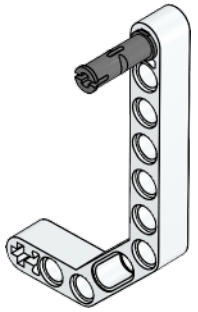

2

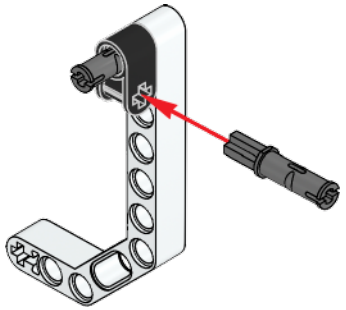

3

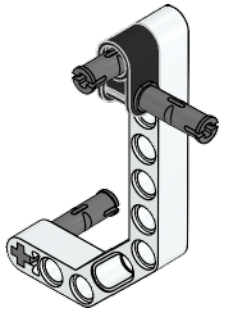

184

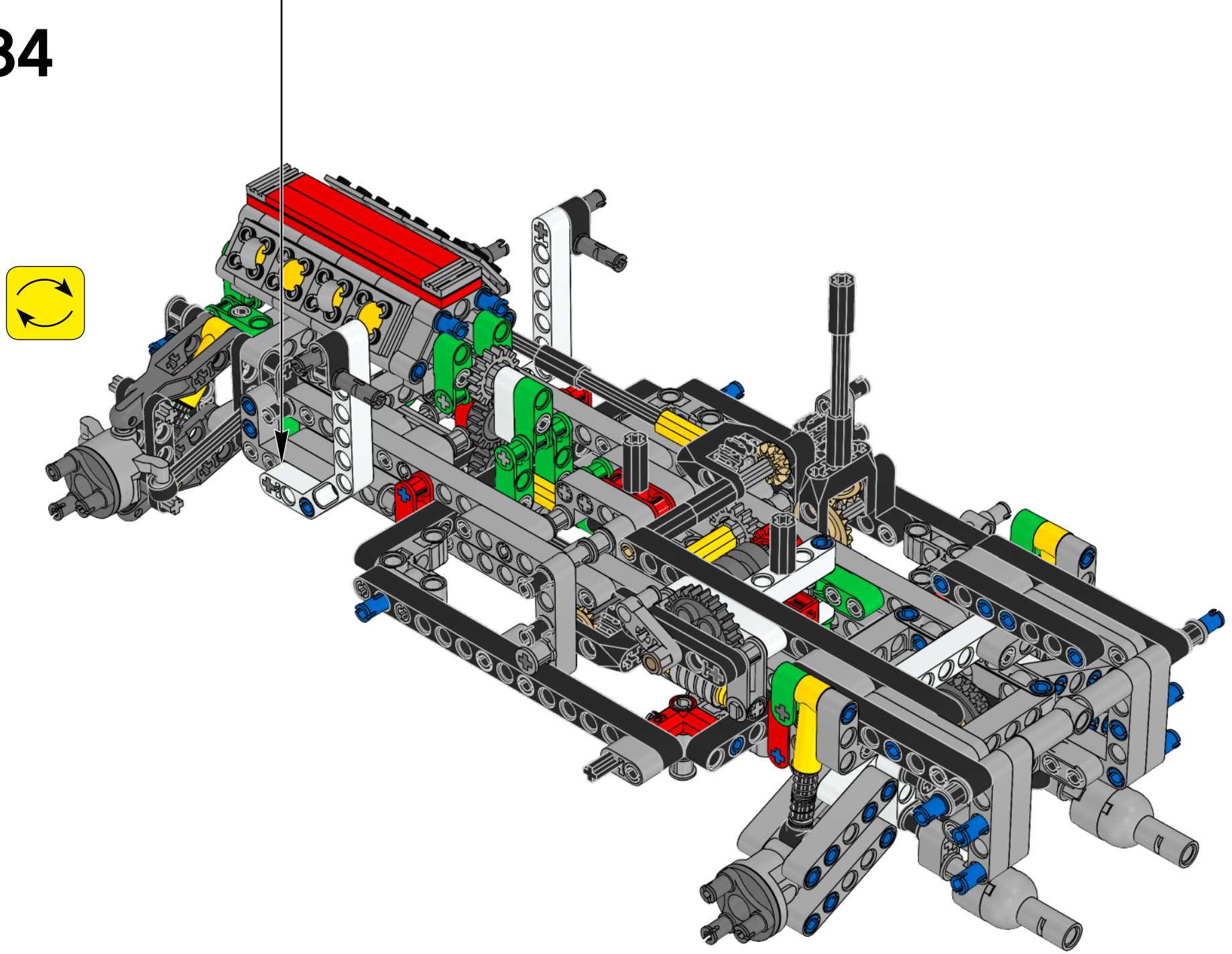

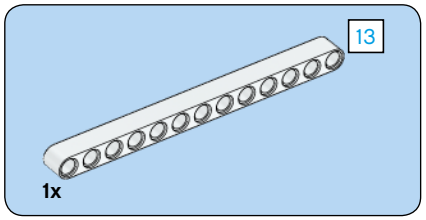

185

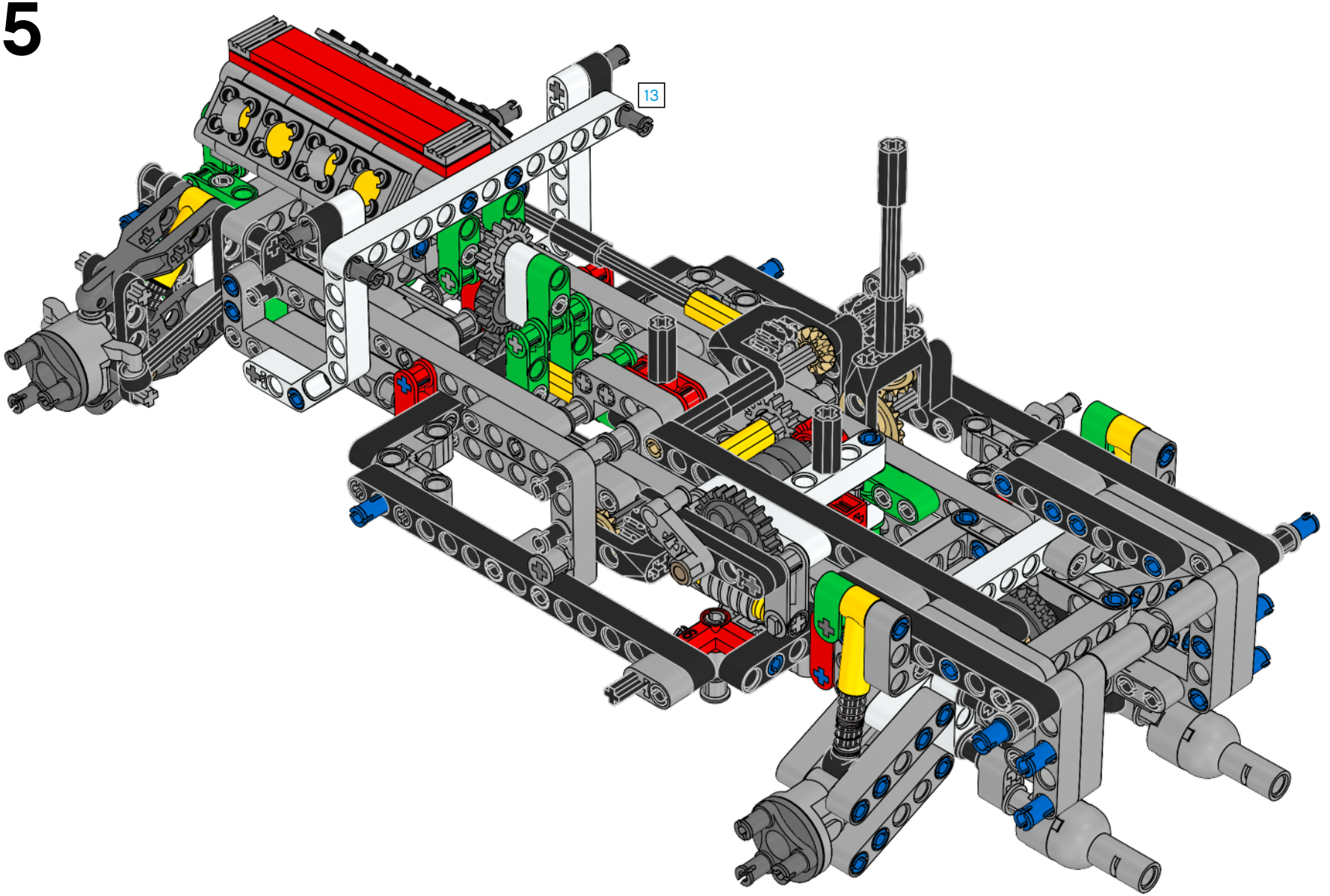

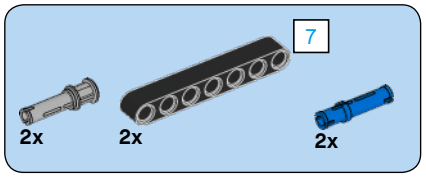

186

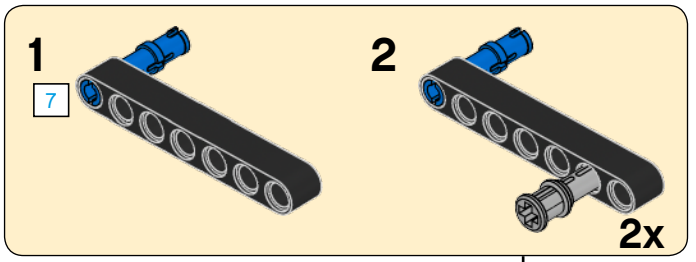

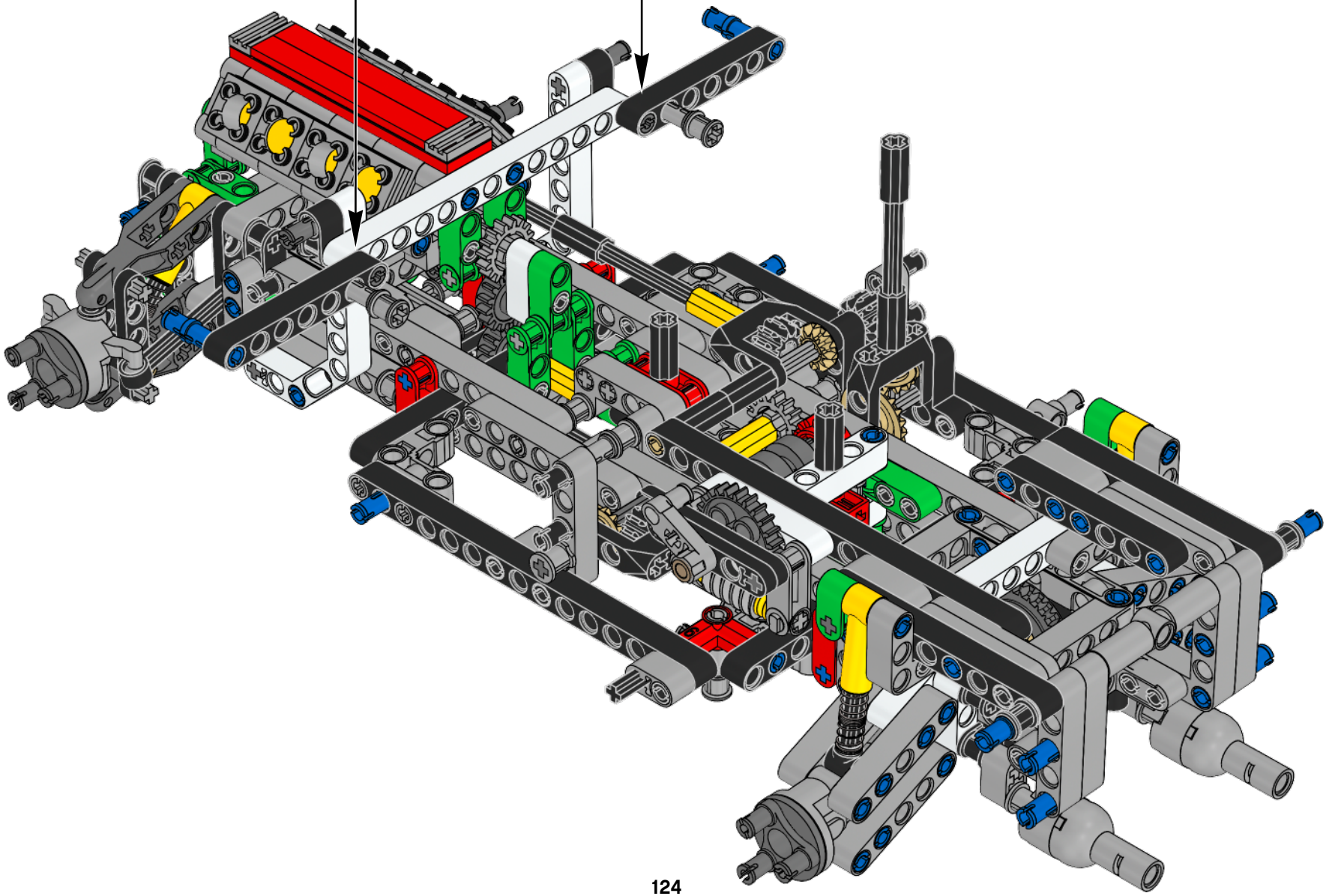

187

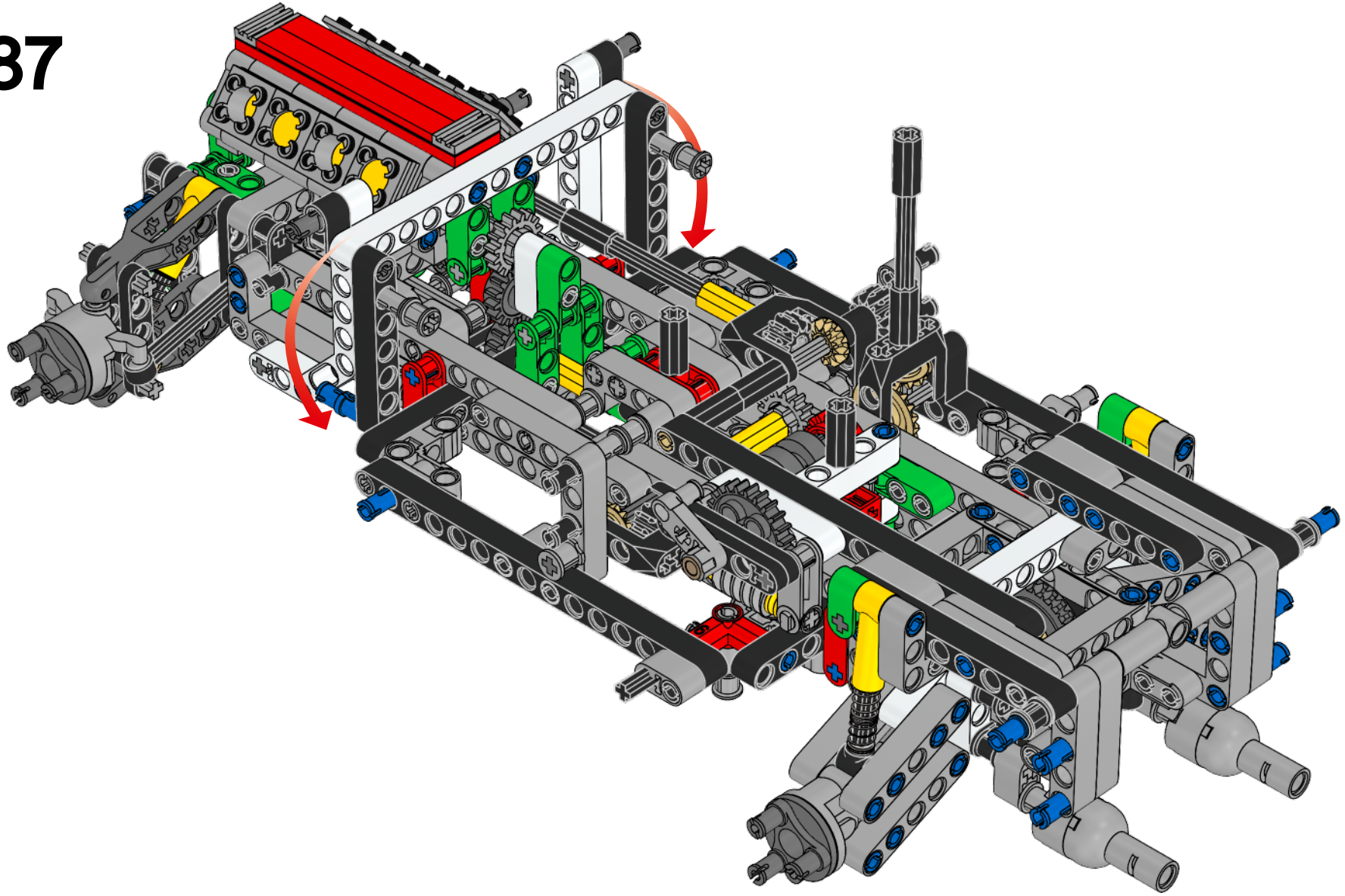

188

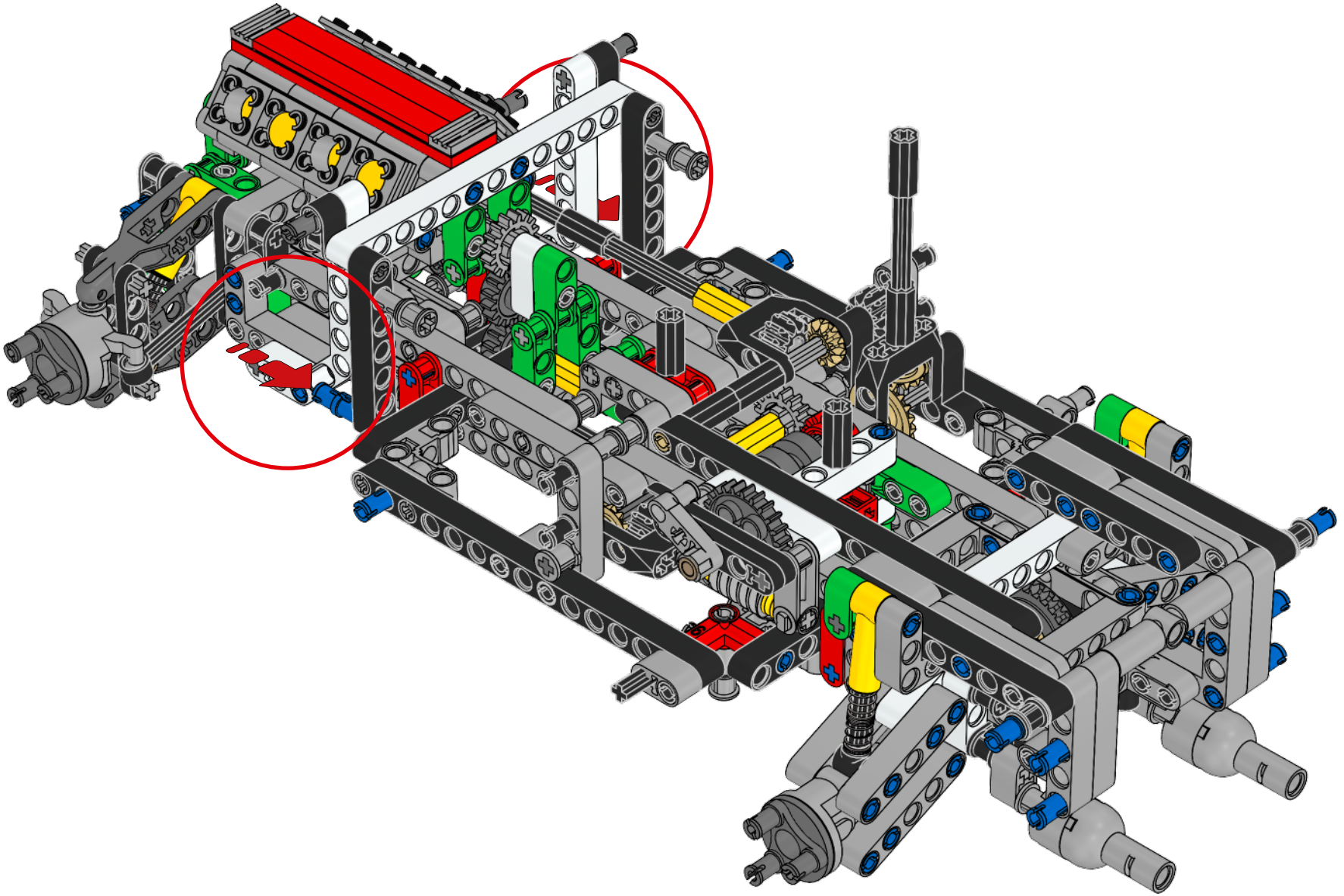

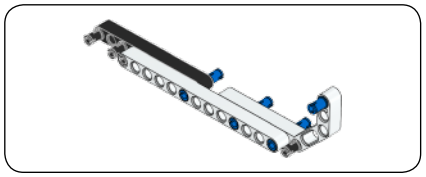

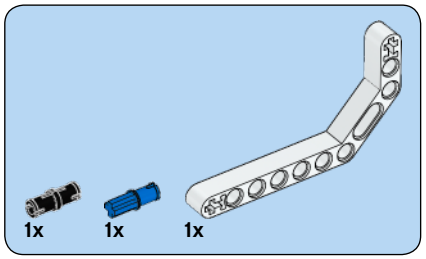

189

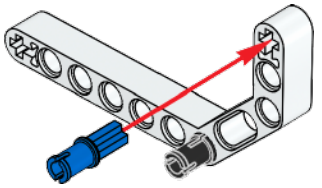

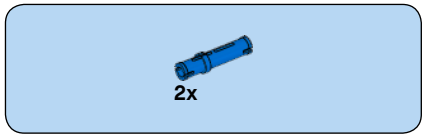

190

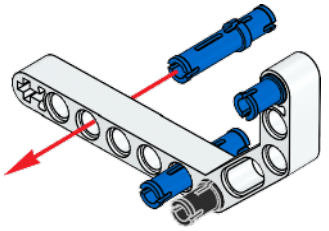

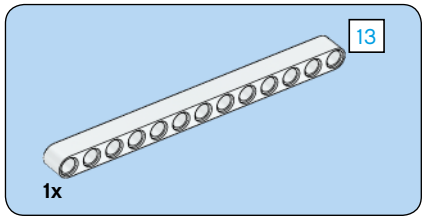

191

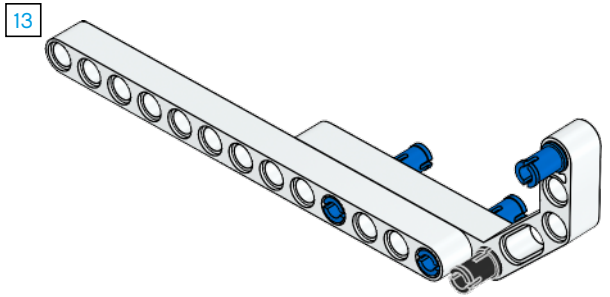

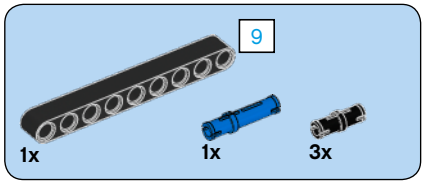

192

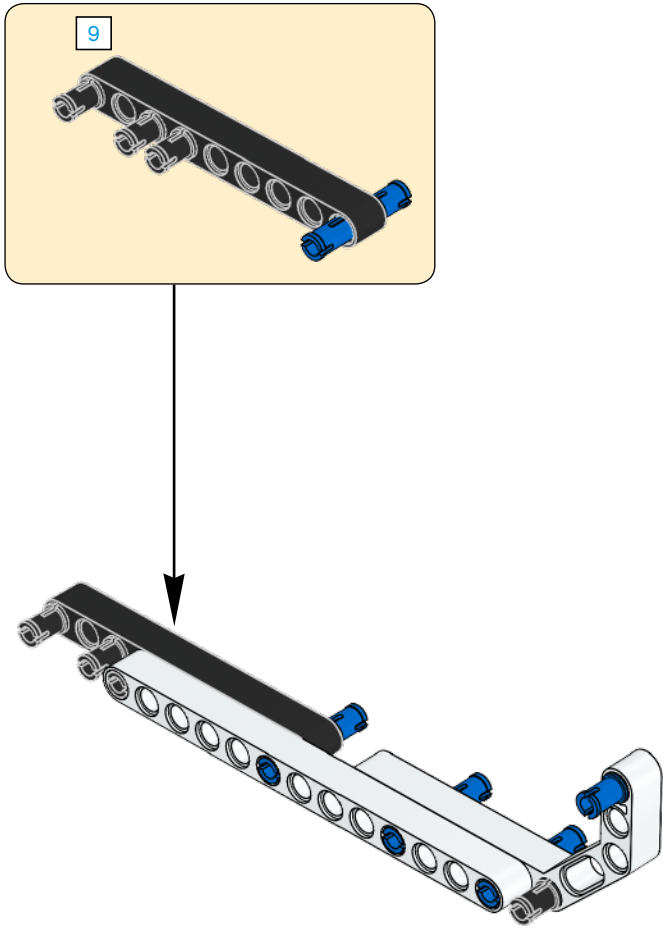

193

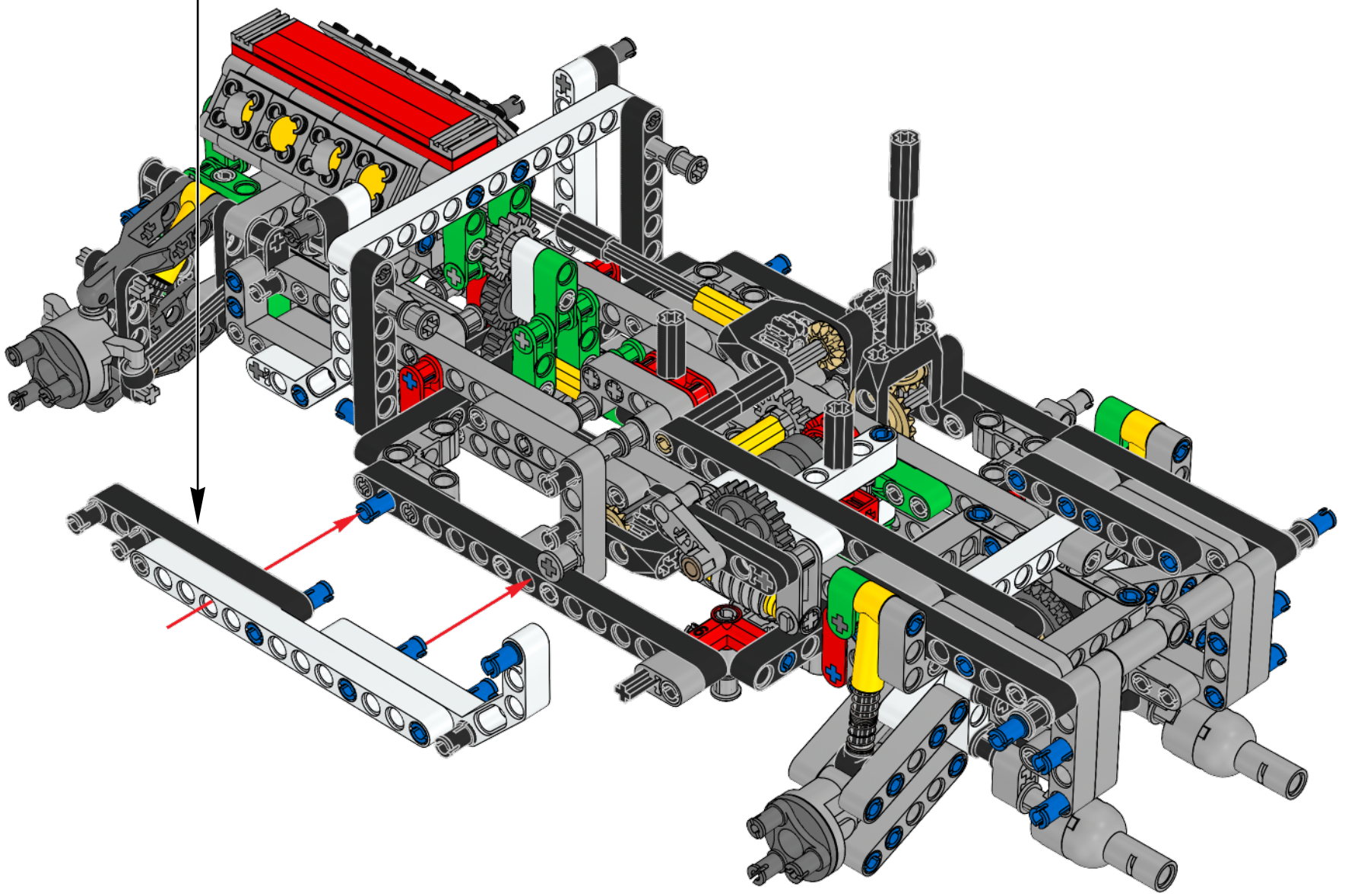

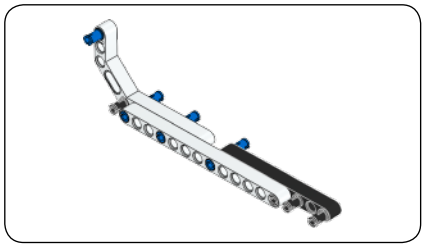

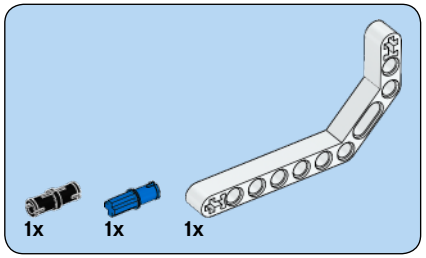

194

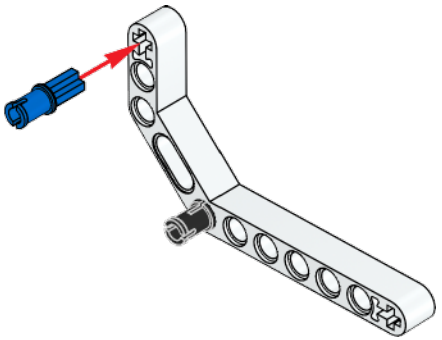

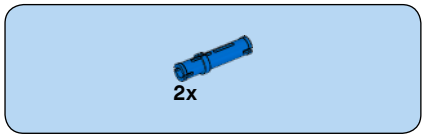

195

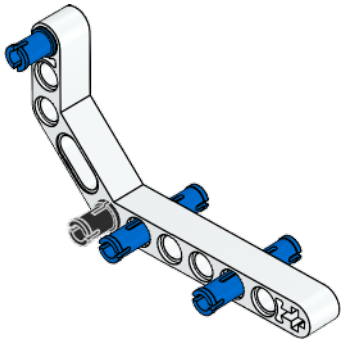

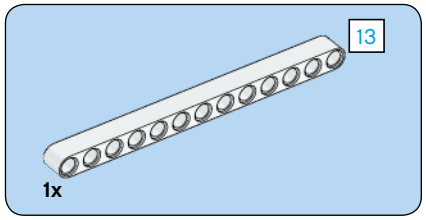

196

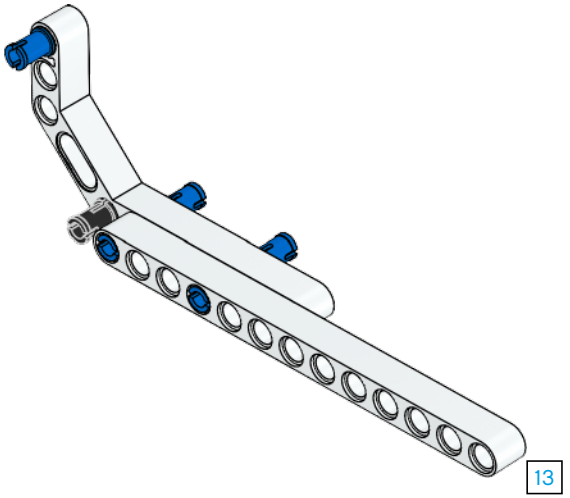

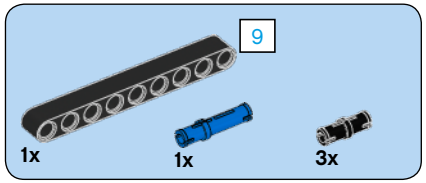

197

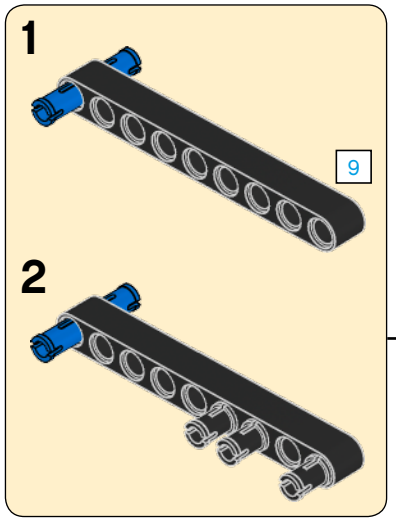

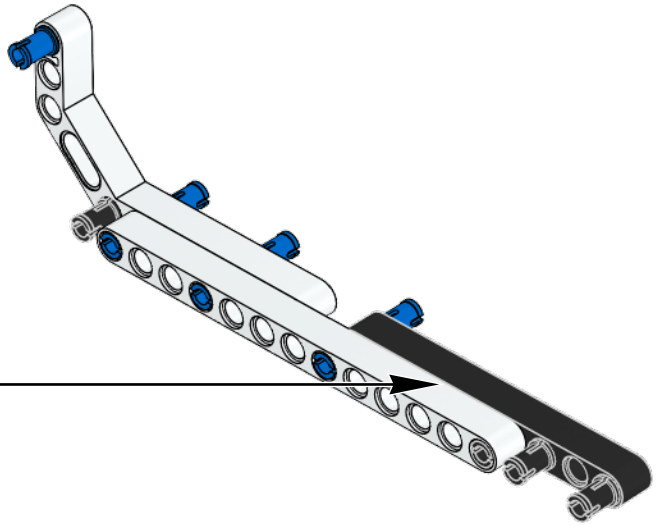

198

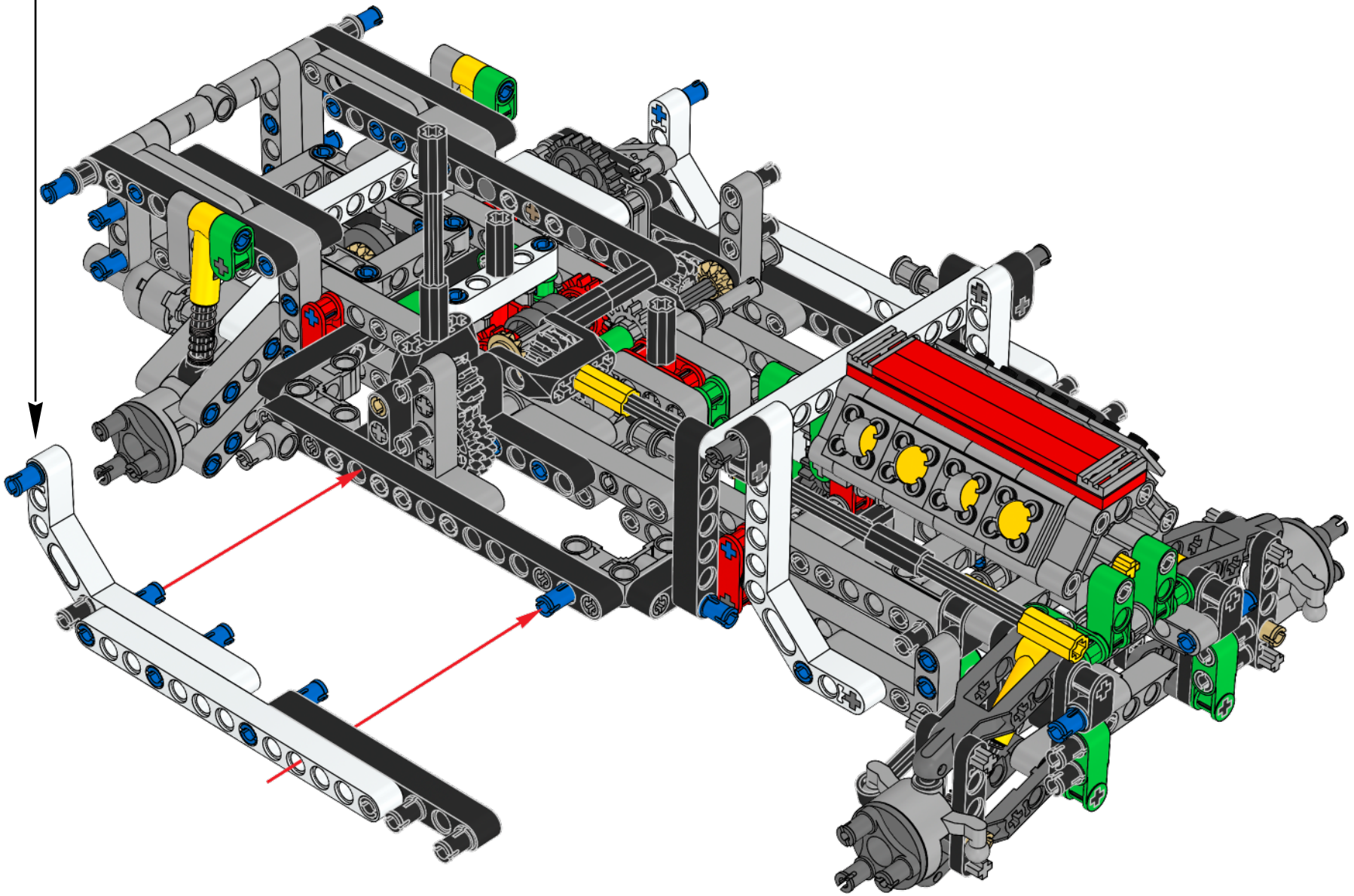

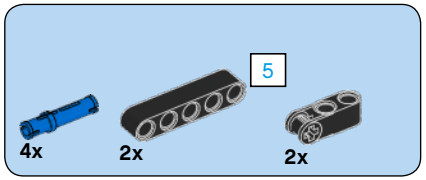

199

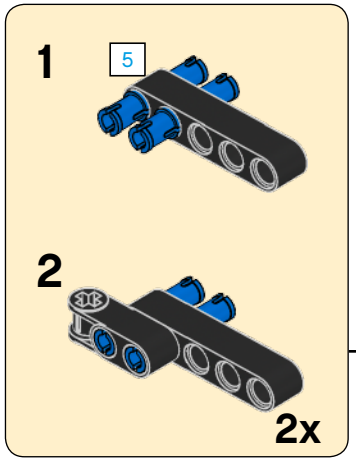

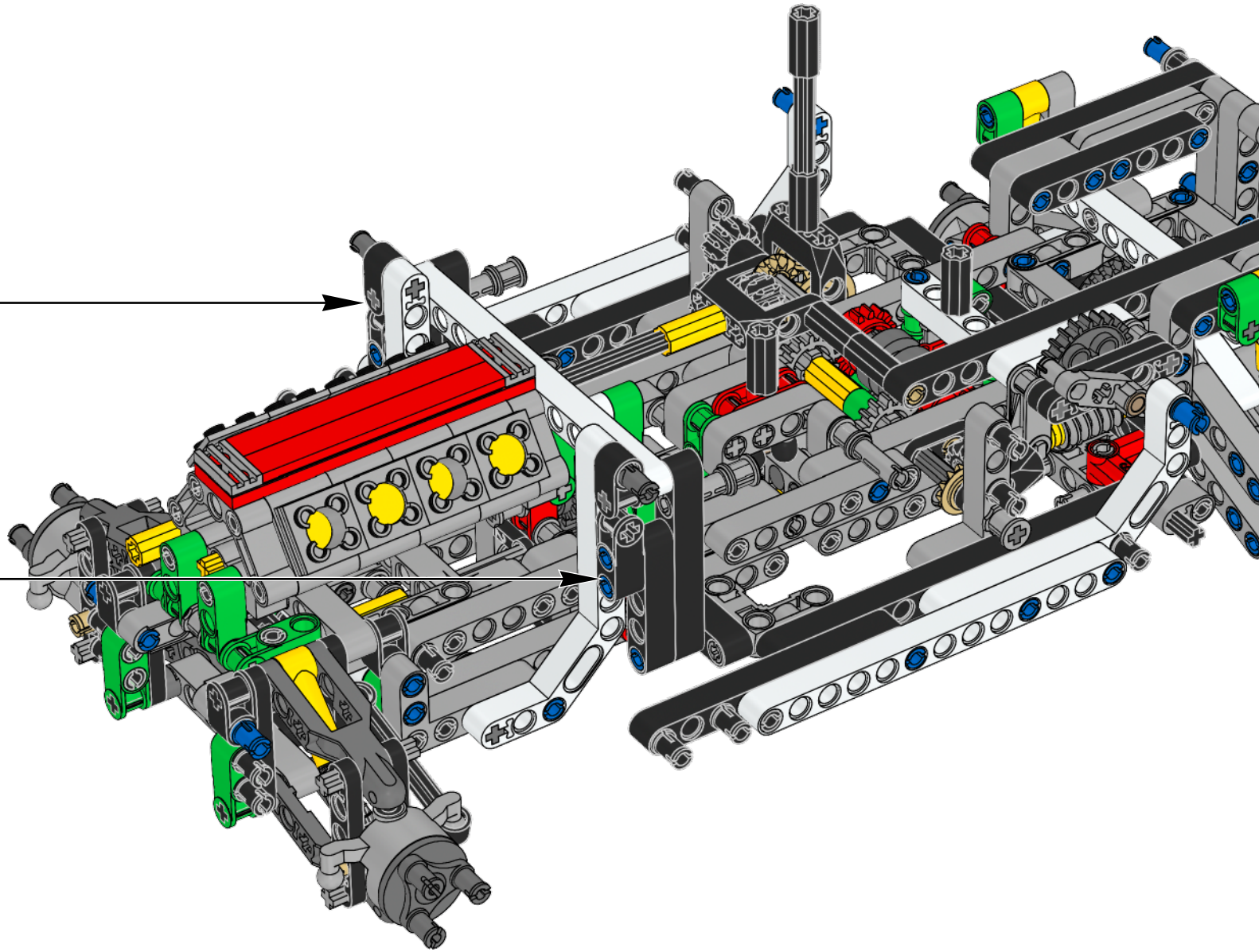

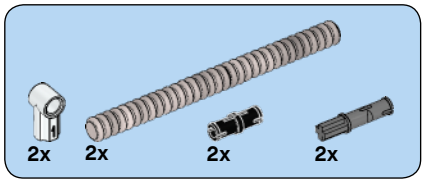

200

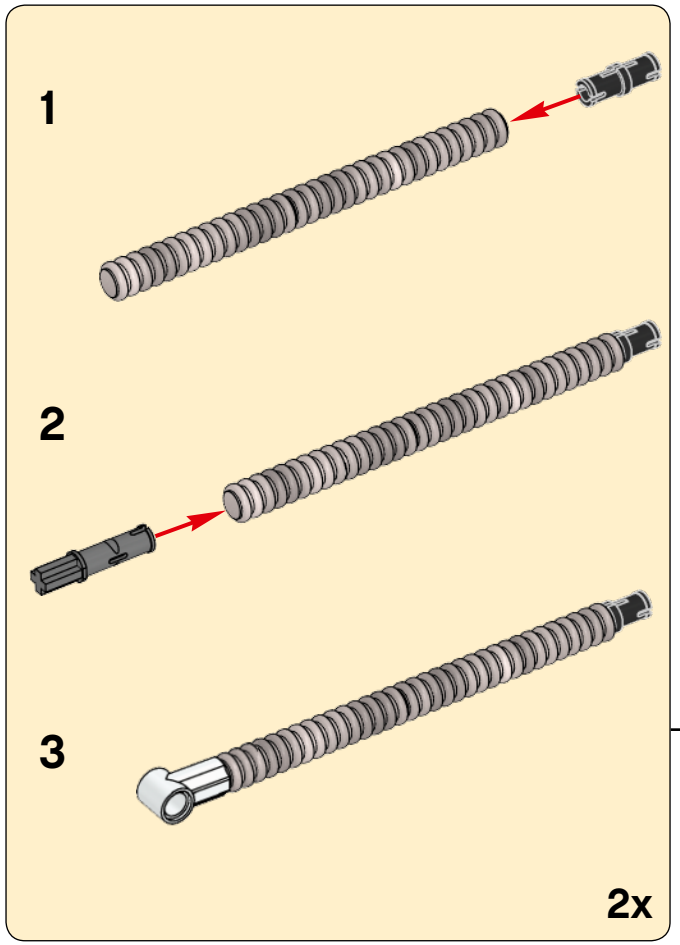

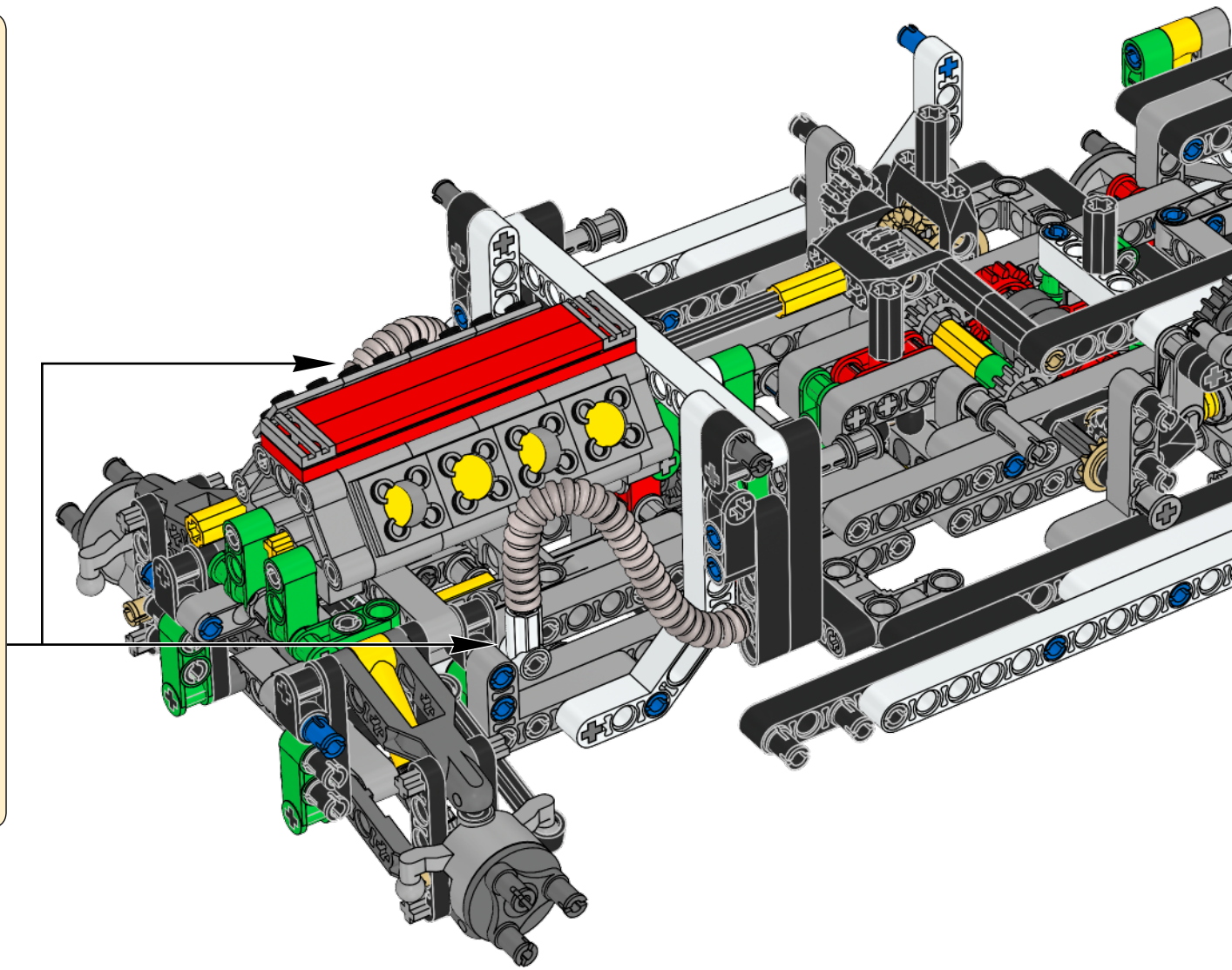

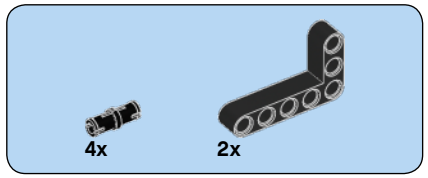

201

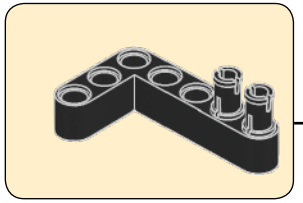

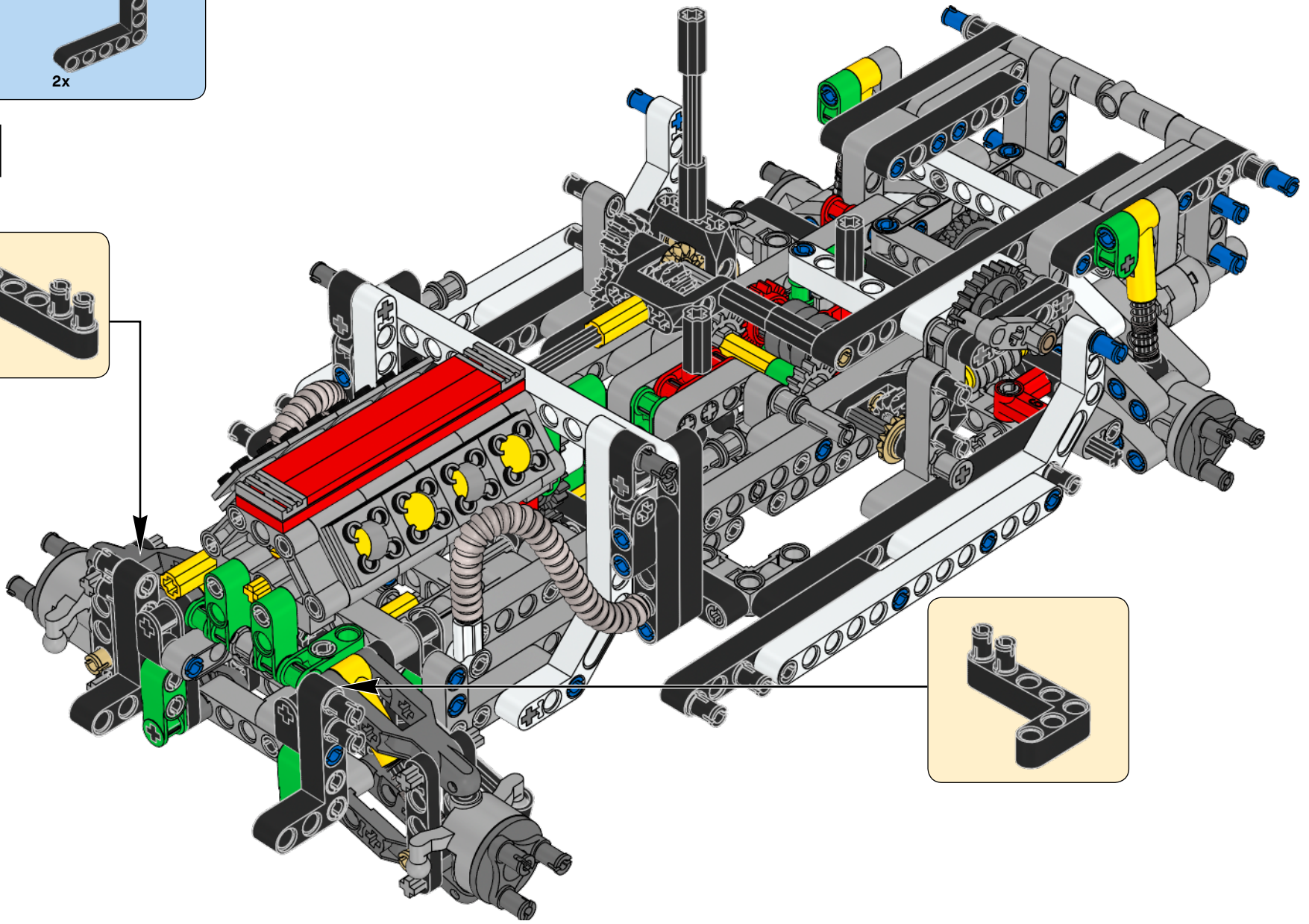

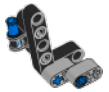

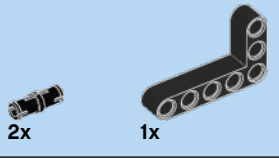

202

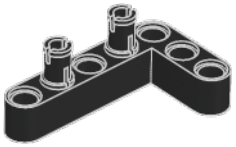

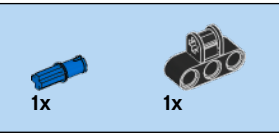

203

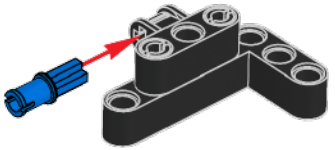

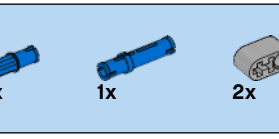

204

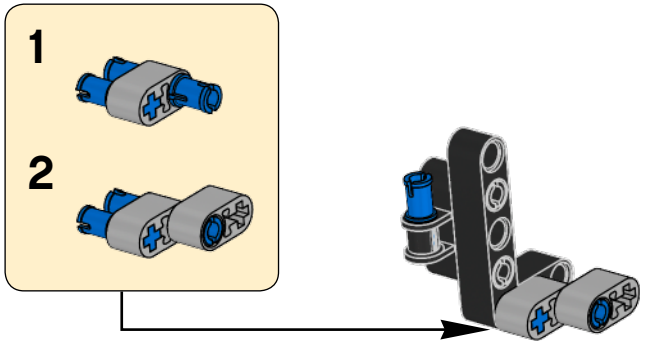

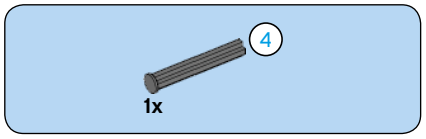

205

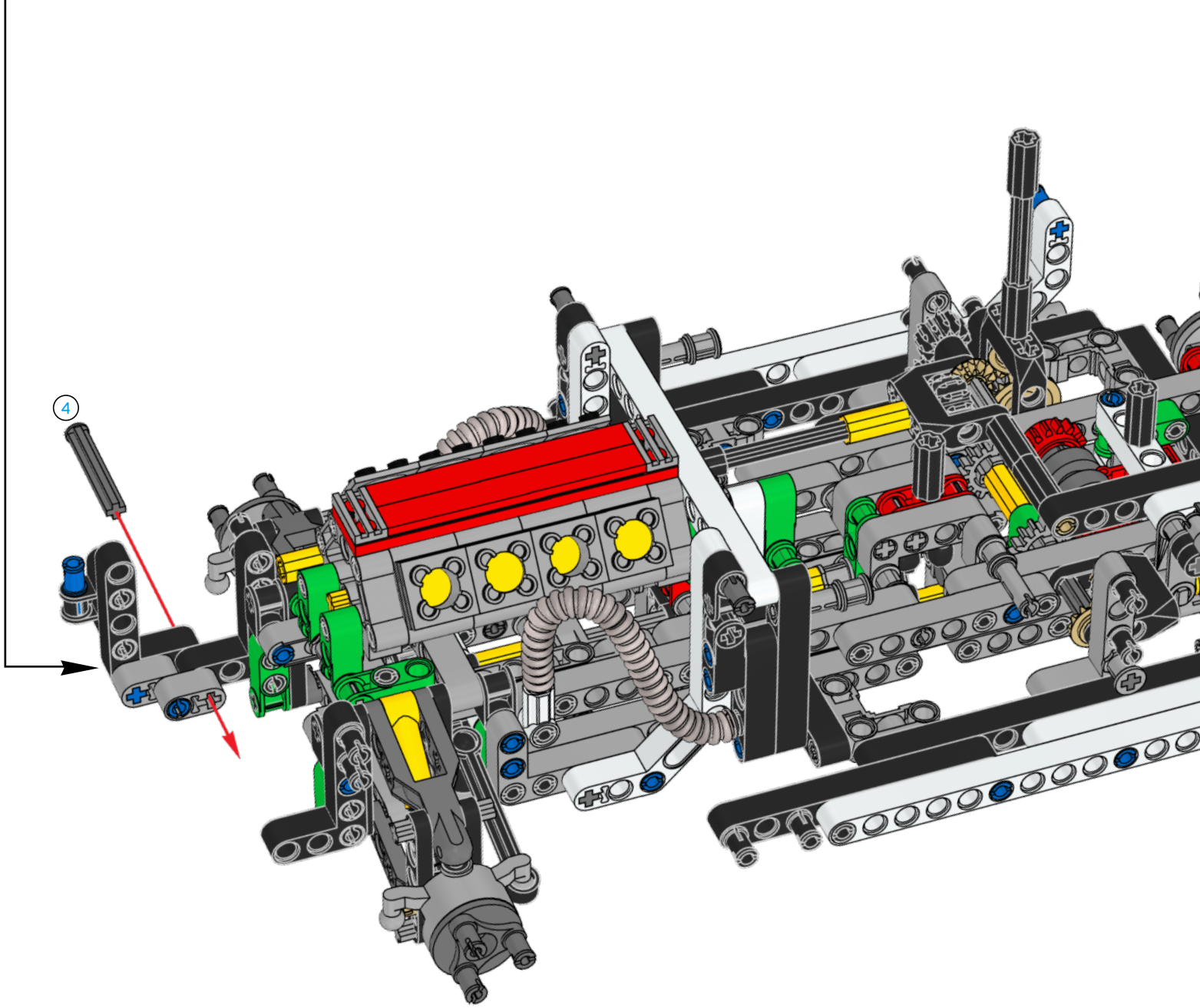

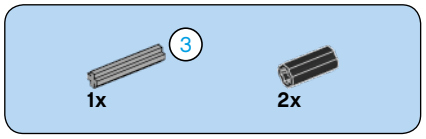

206

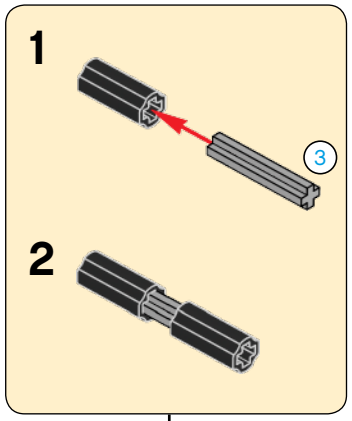

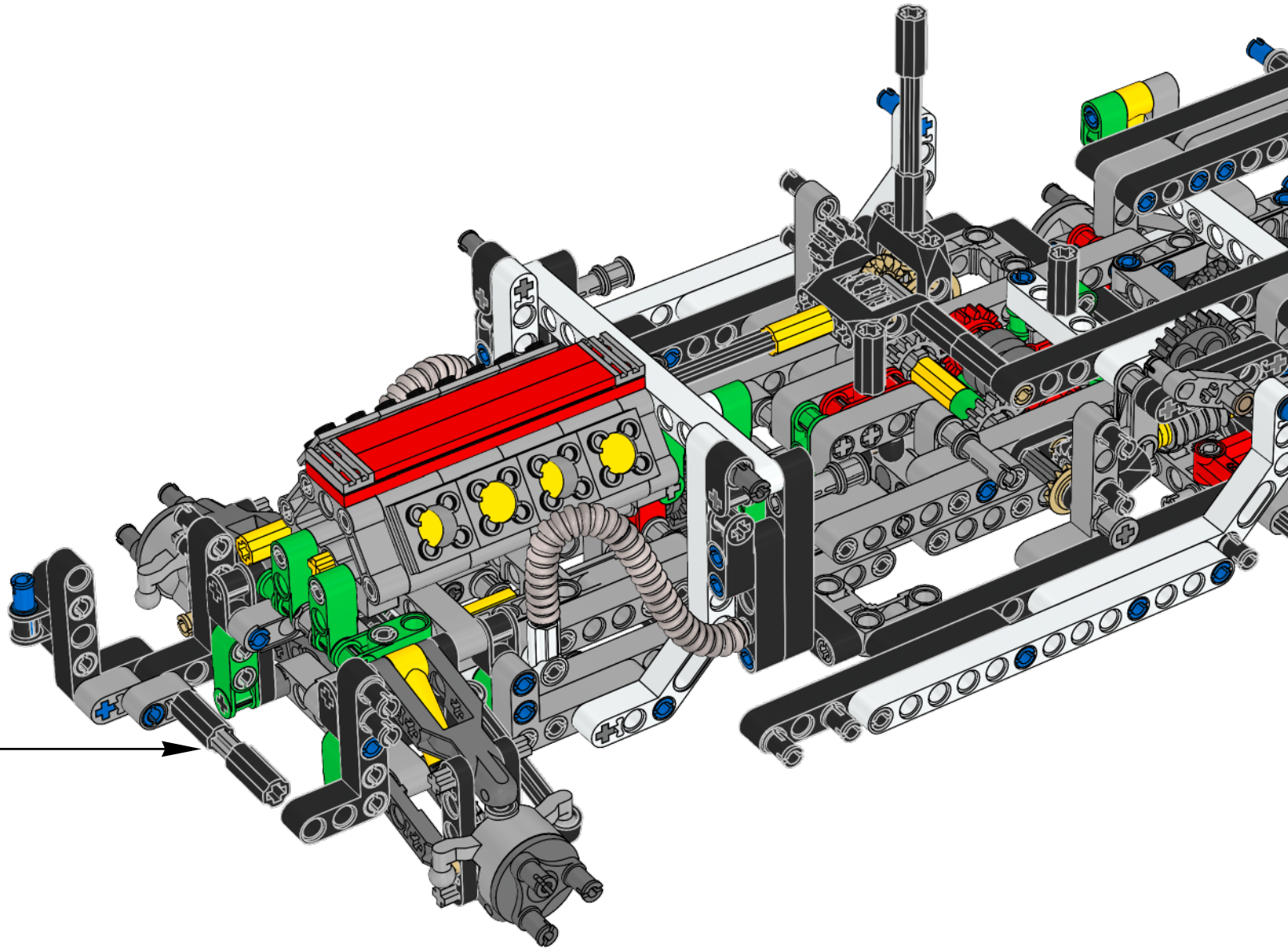

207

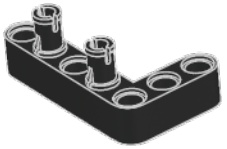

208

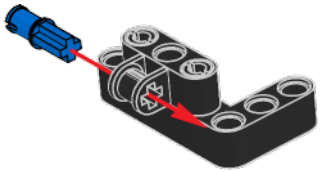

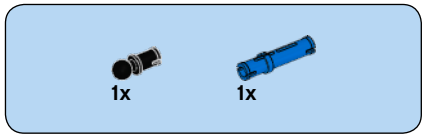

209

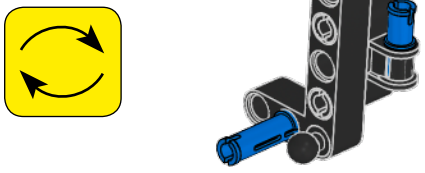

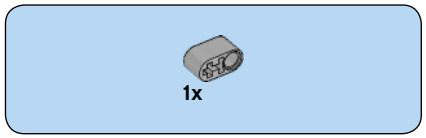

210

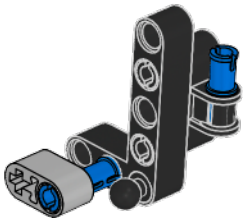

211

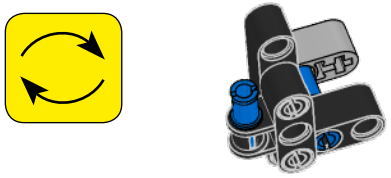

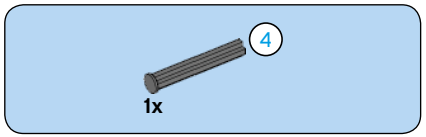

212

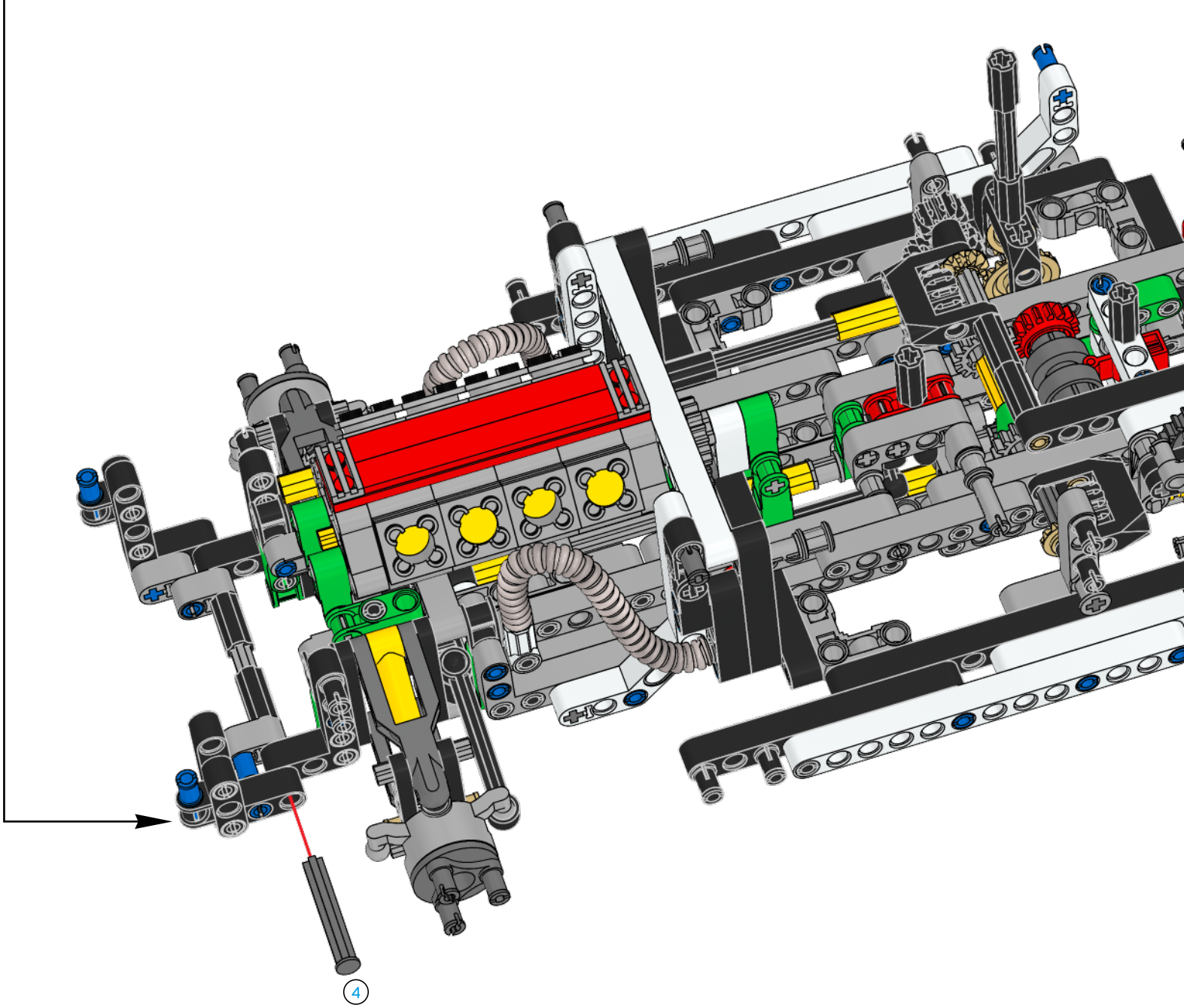

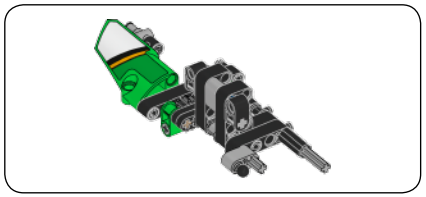

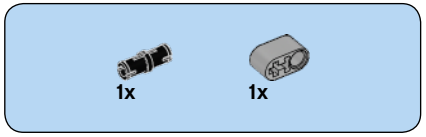

213

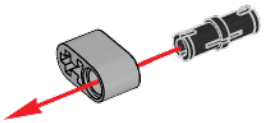

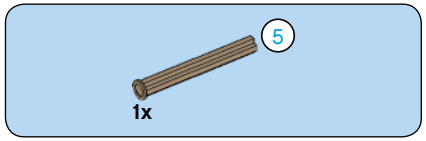

214

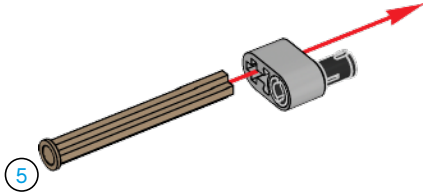

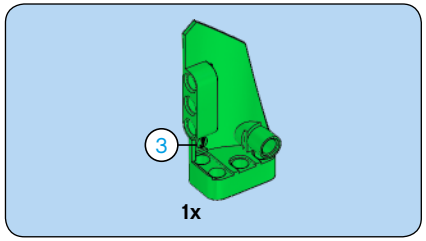

215

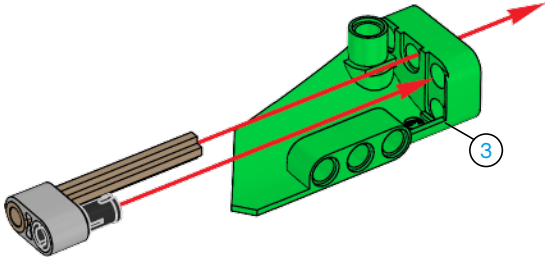

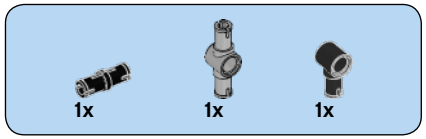

216

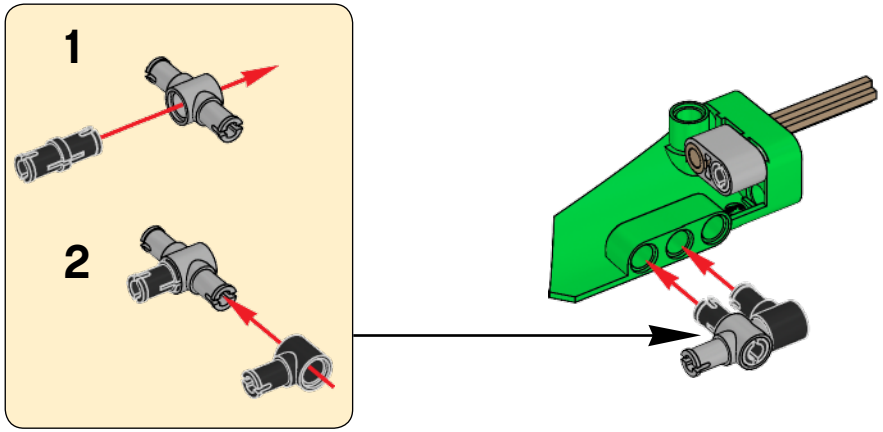

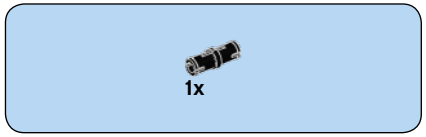

217

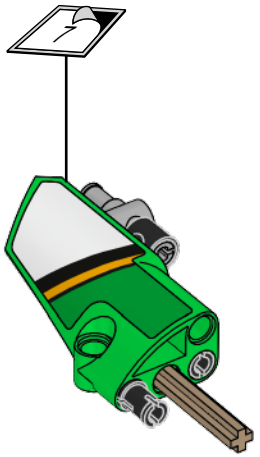

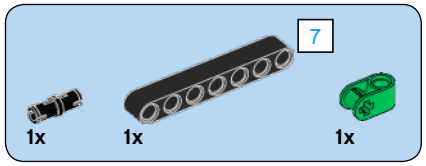

218

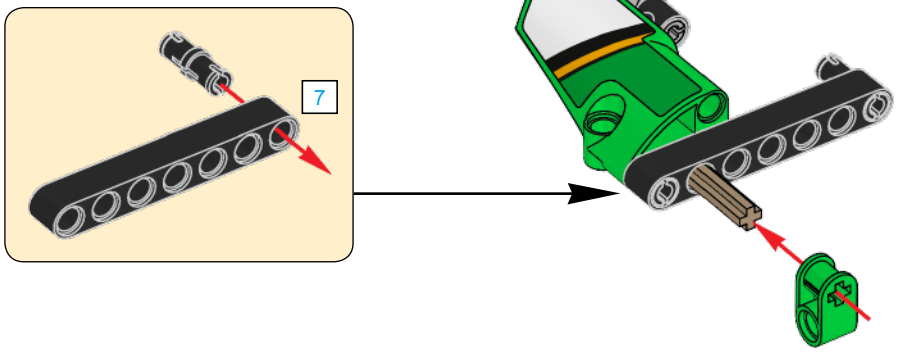

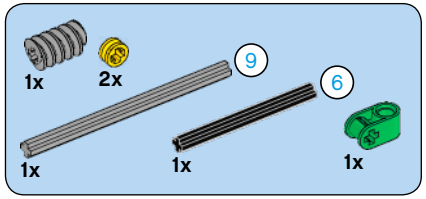

219

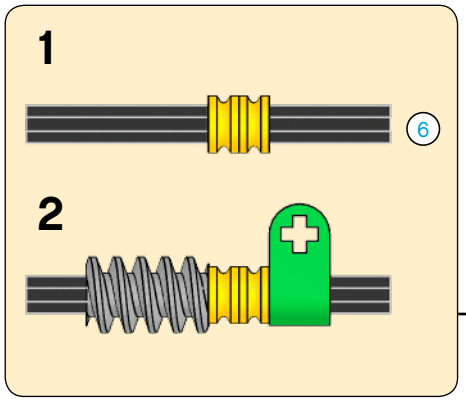

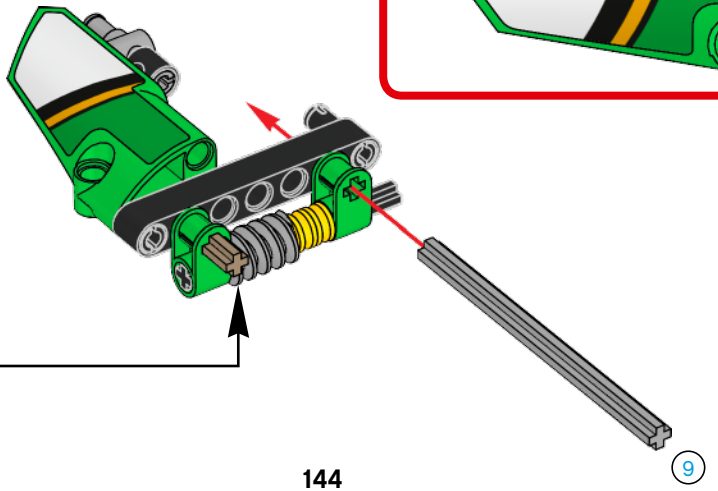

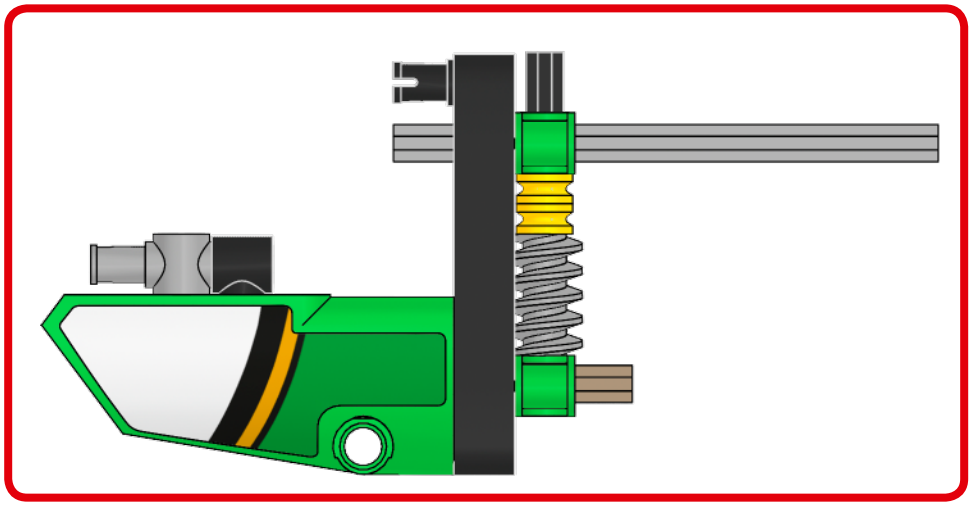

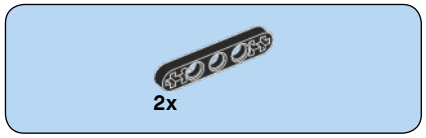

220

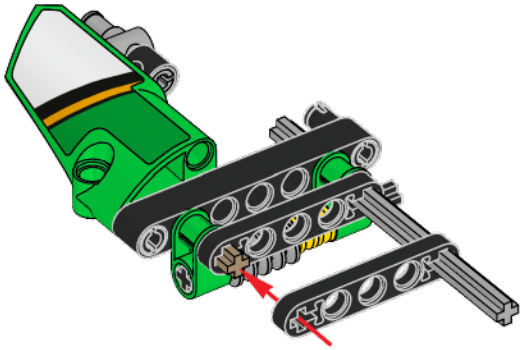

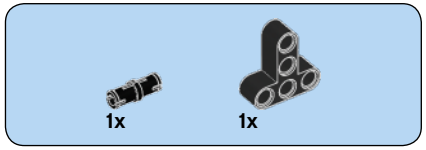

221

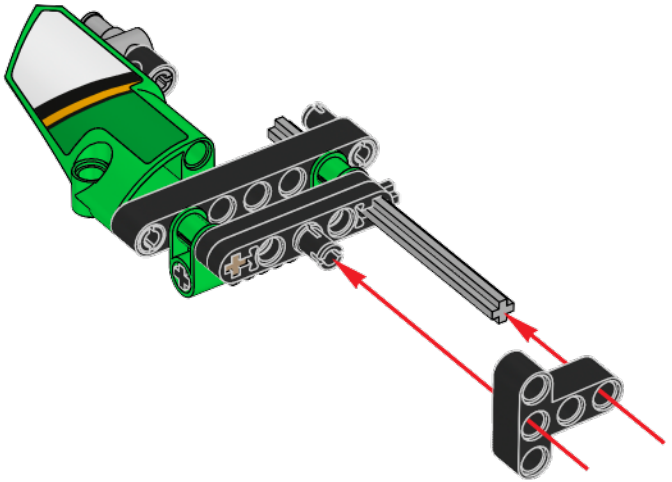

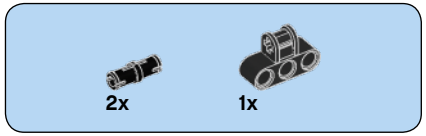

222

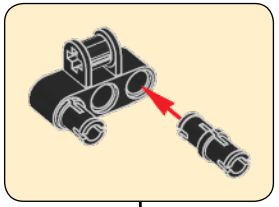

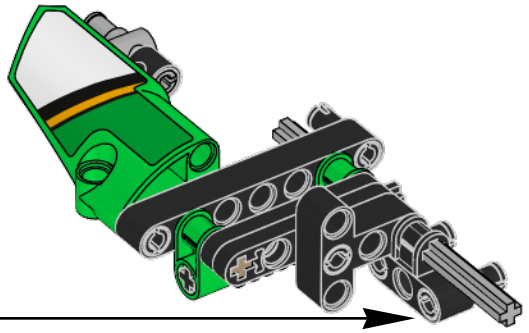

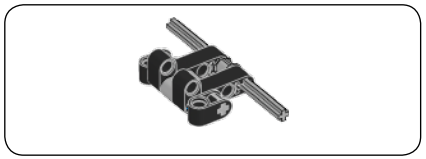

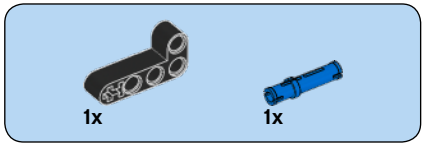

223

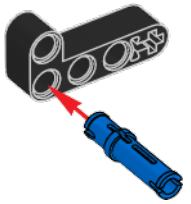

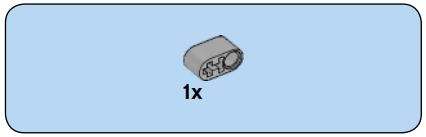

224

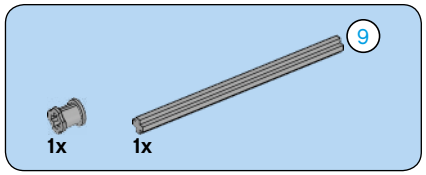

225

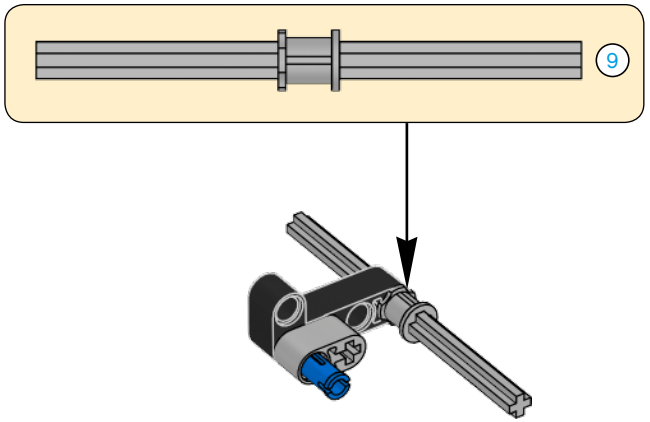

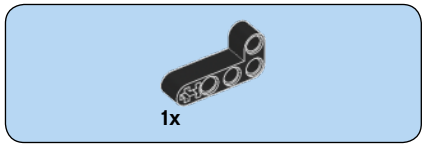

226

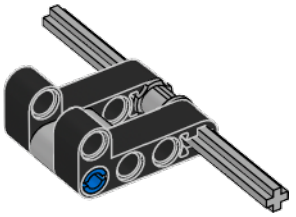

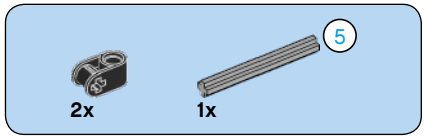

227

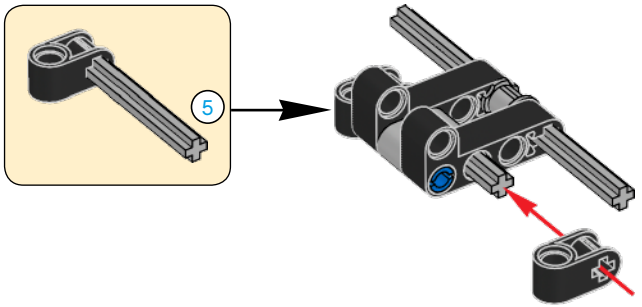

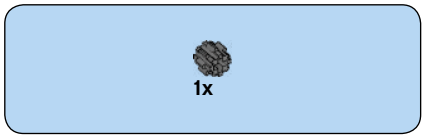

228

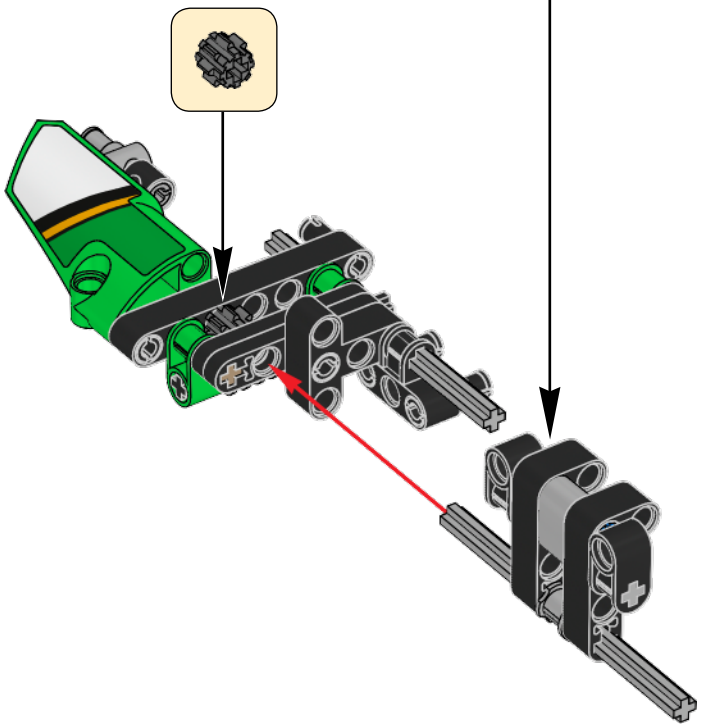

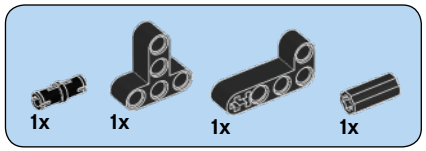

229

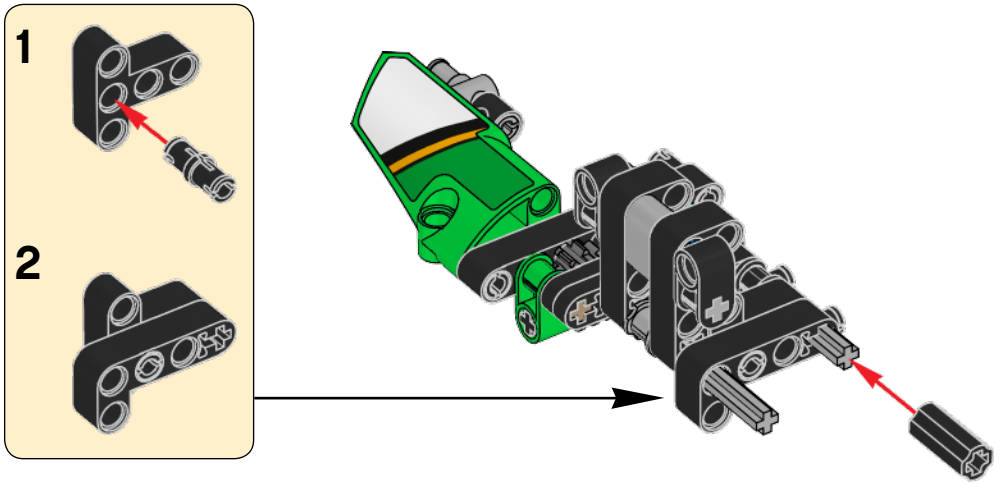

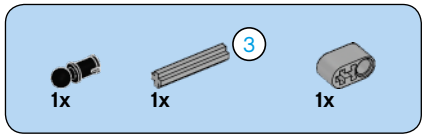

230

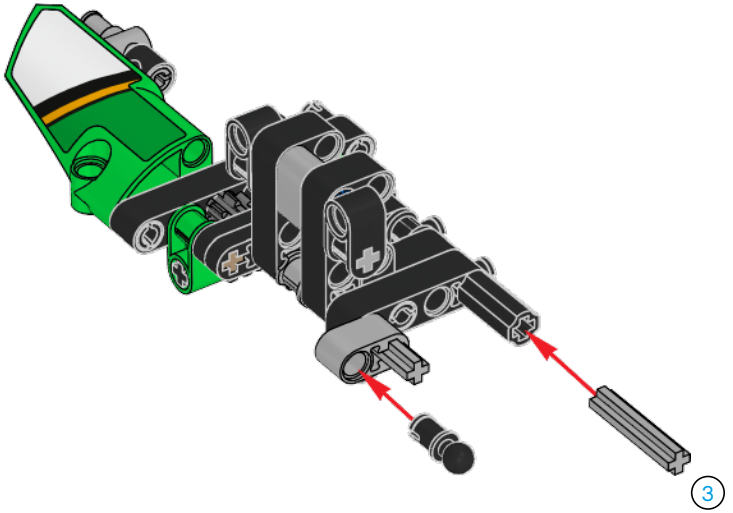

231

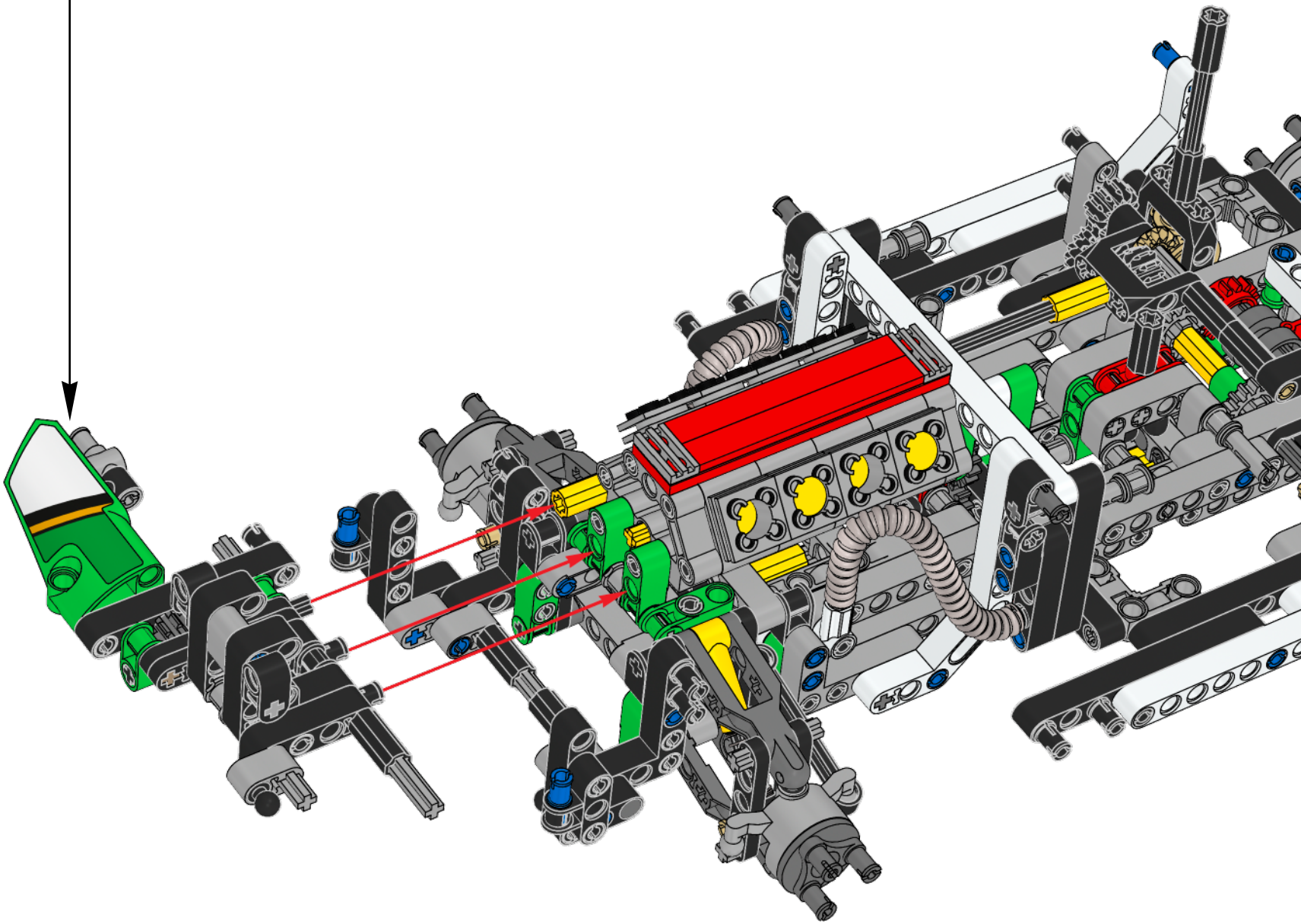

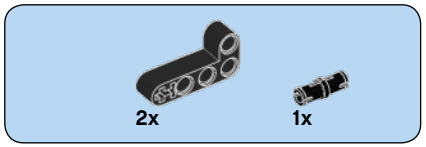

232

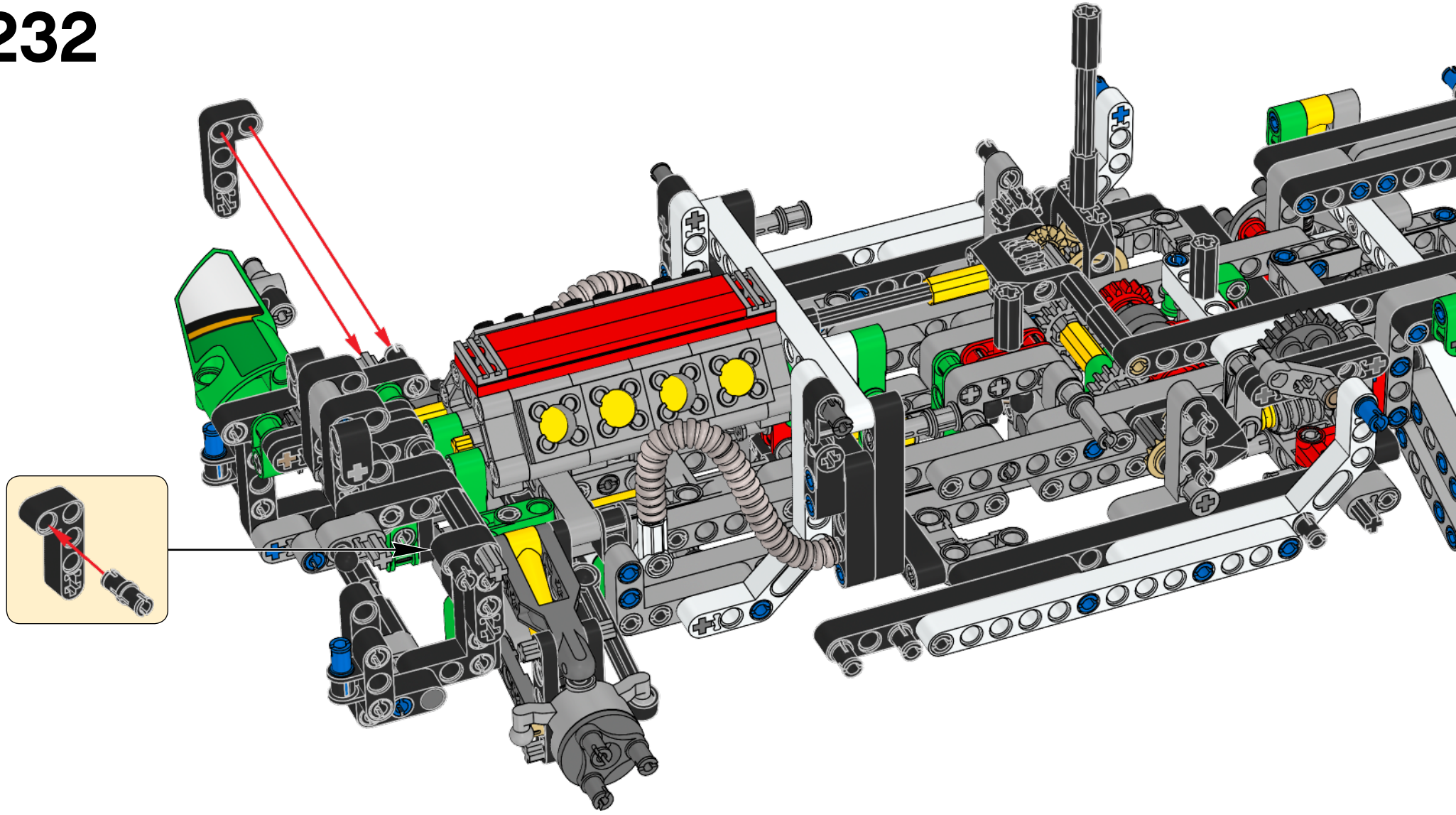

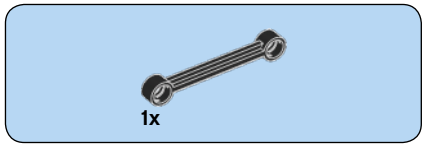

233

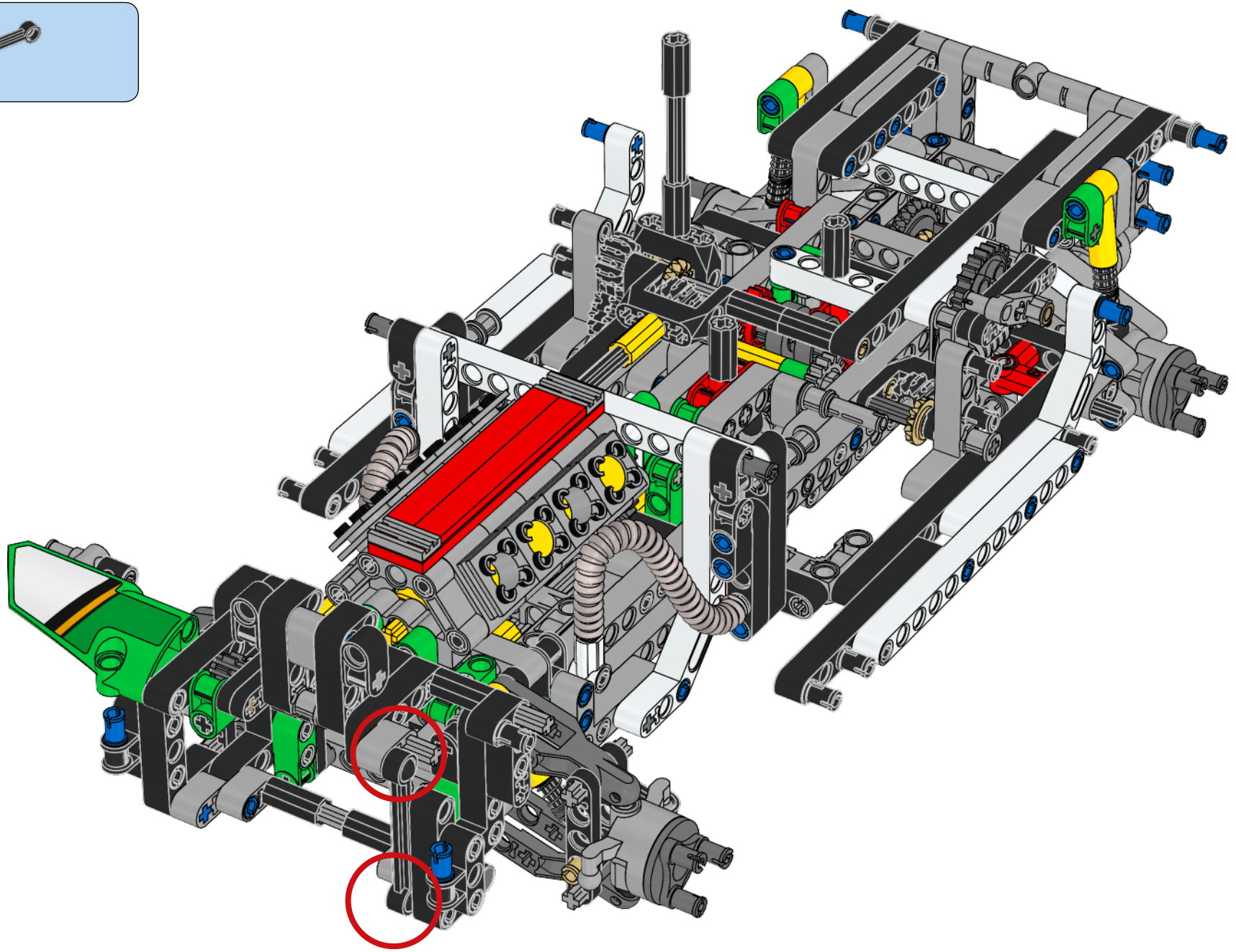

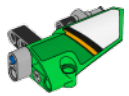

234

235

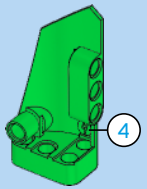

236

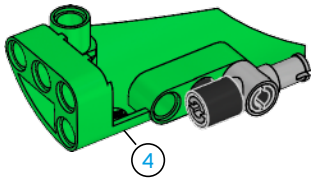

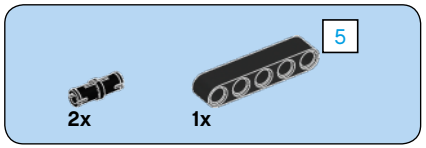

237

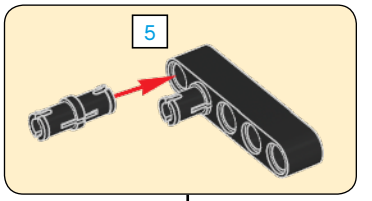

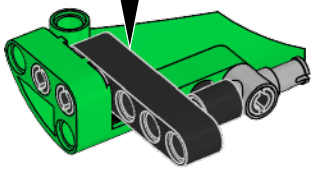

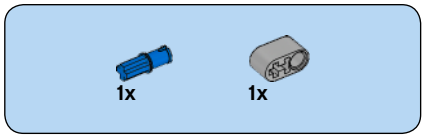

238

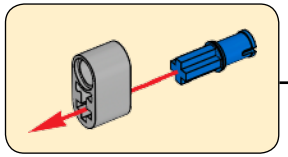

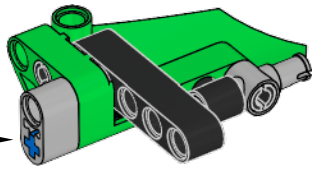

239

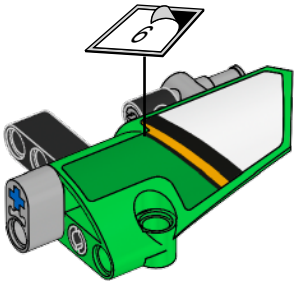

240

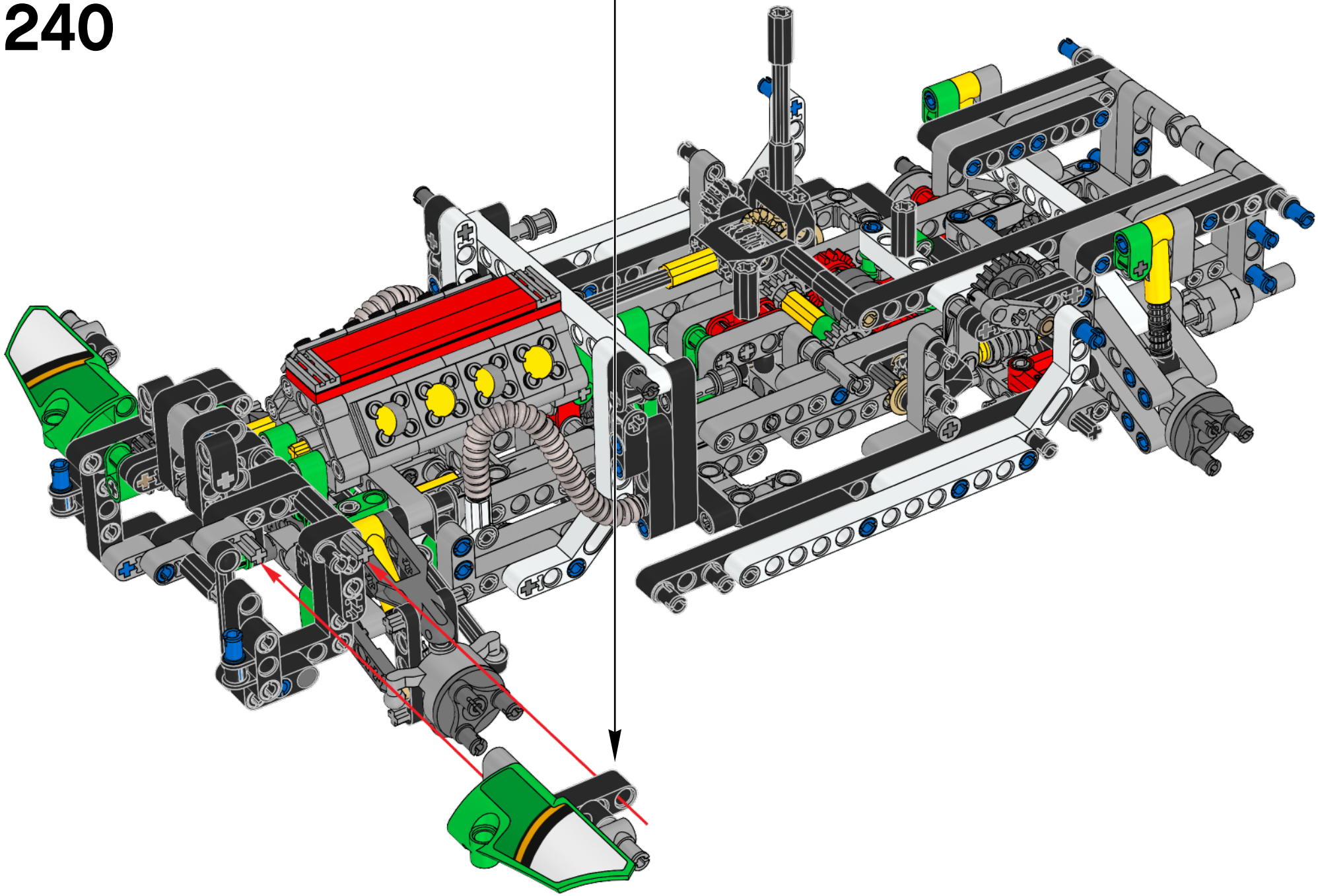

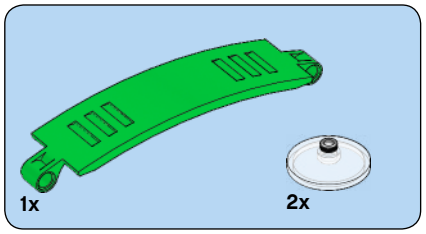

241

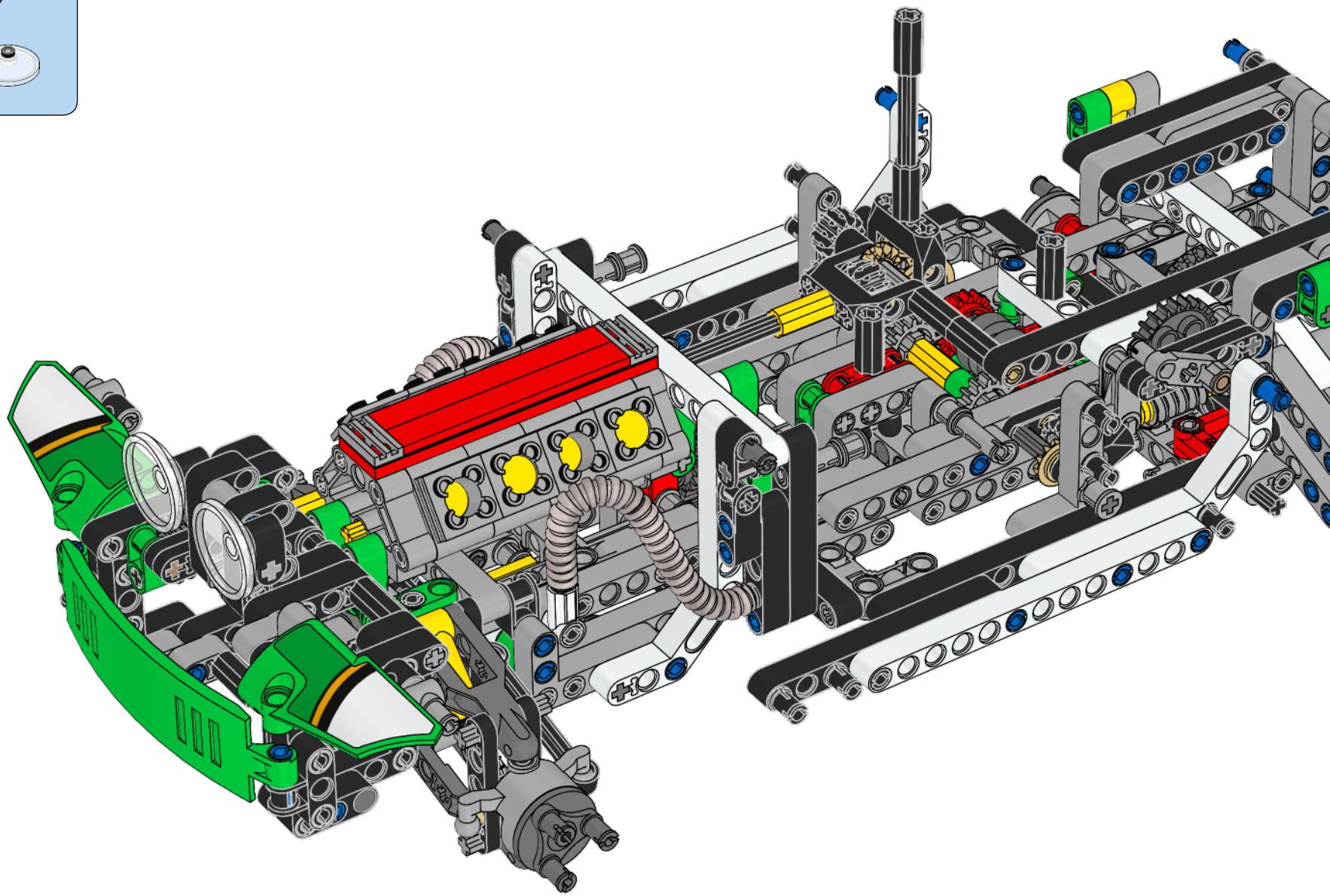

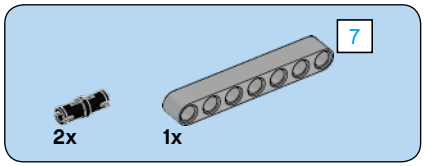

242

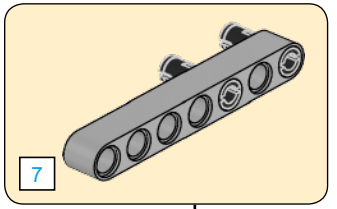

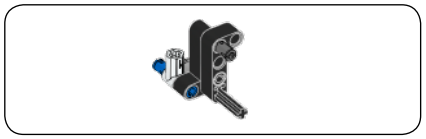

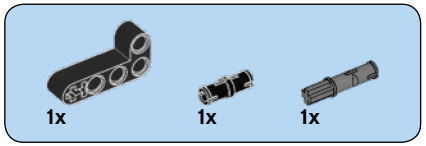

243

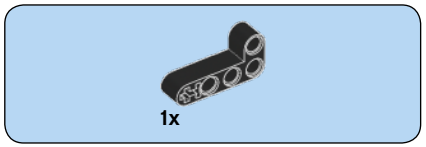

244

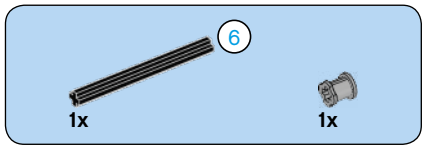

245

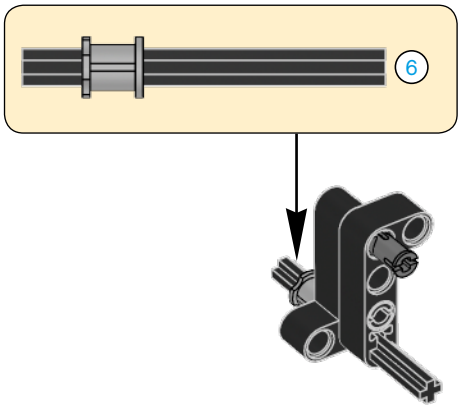

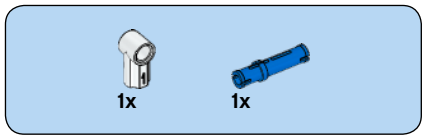

246

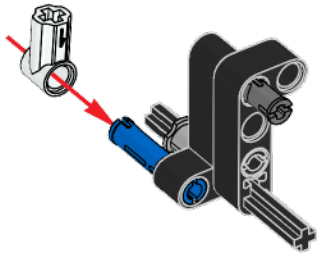

247

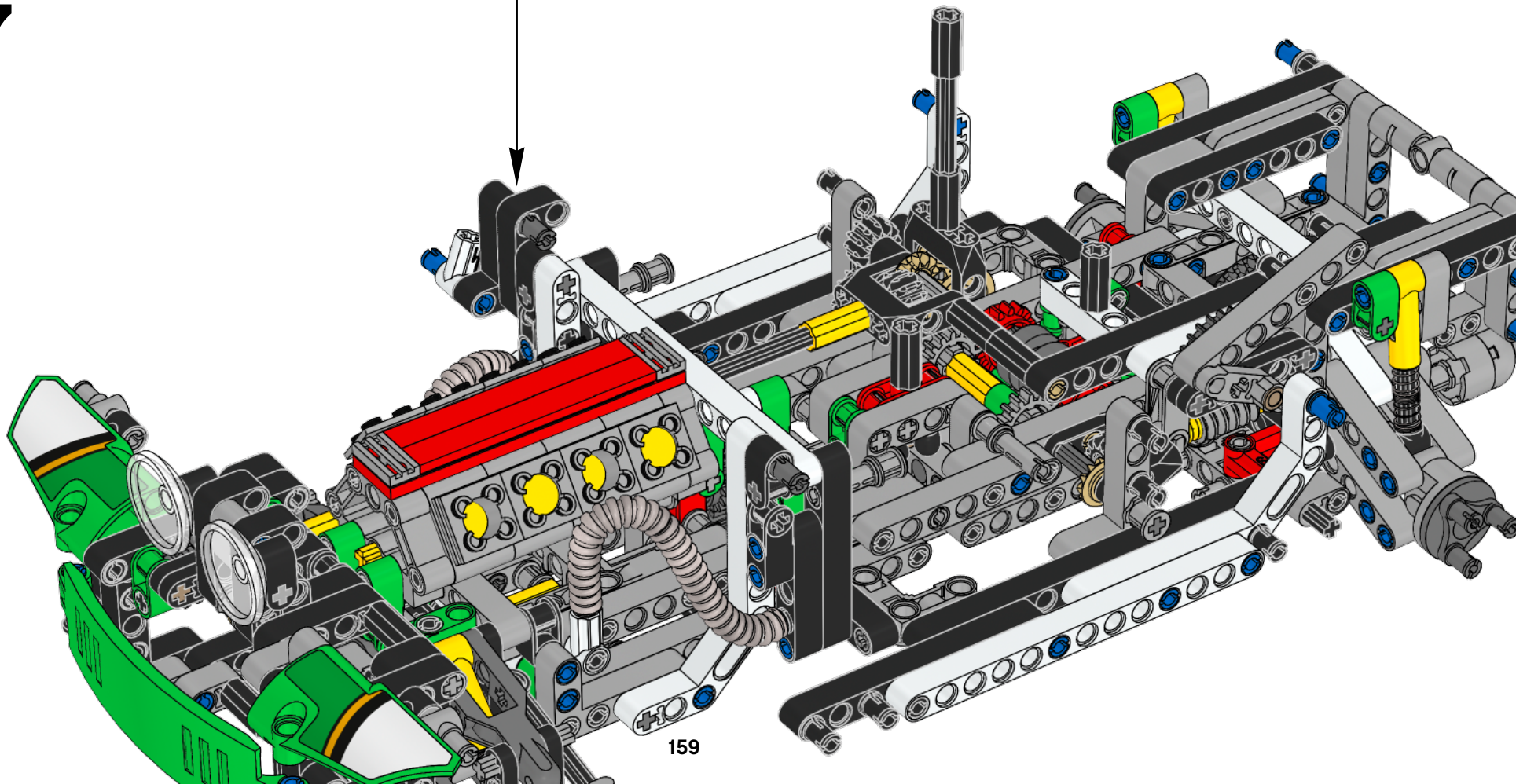

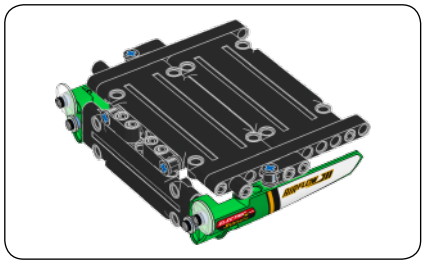

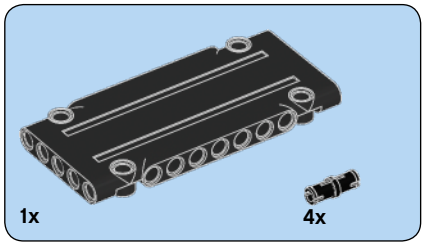

248

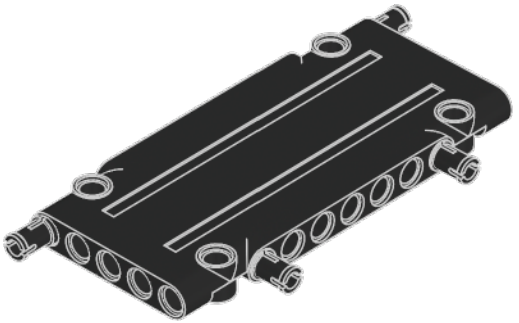

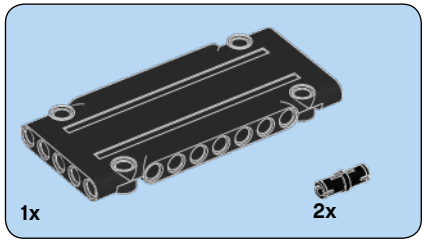

249

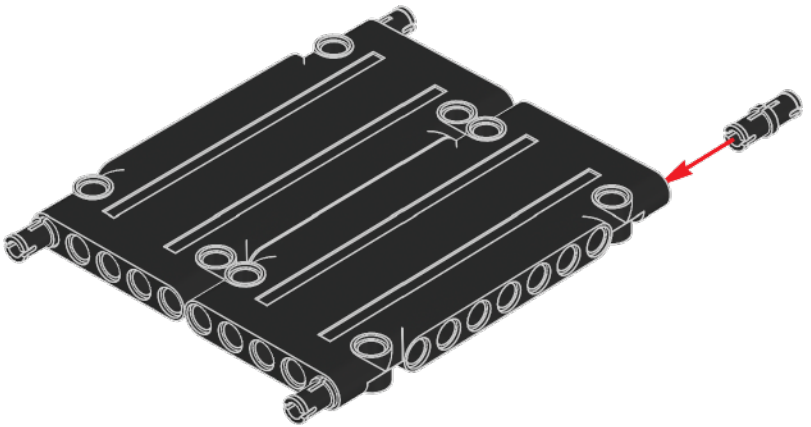

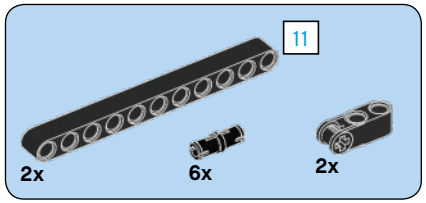

250

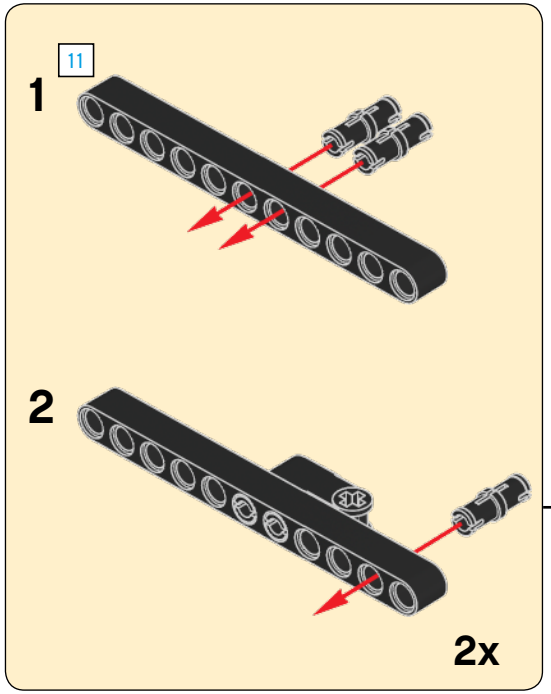

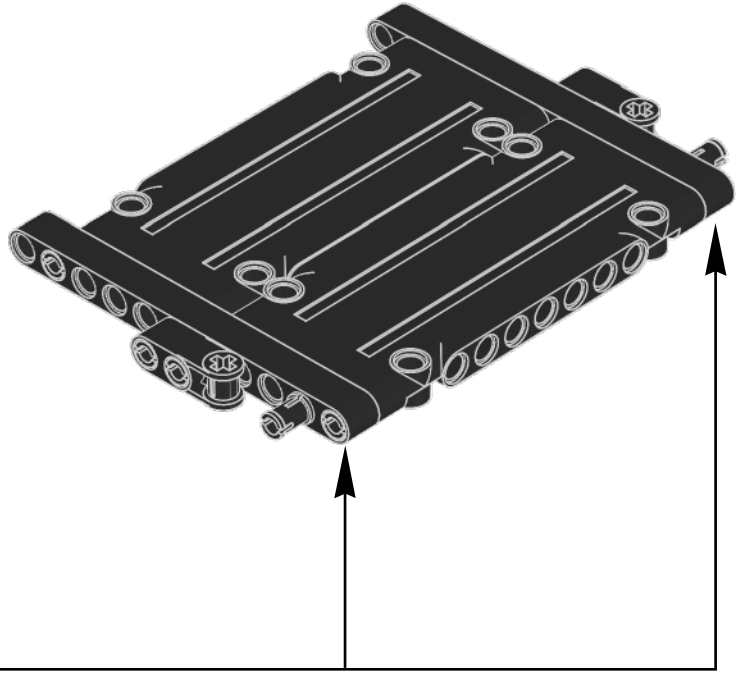

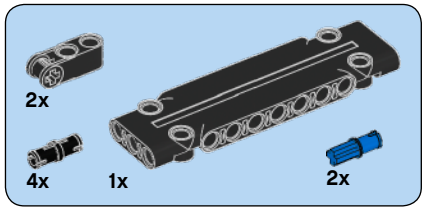

251

1

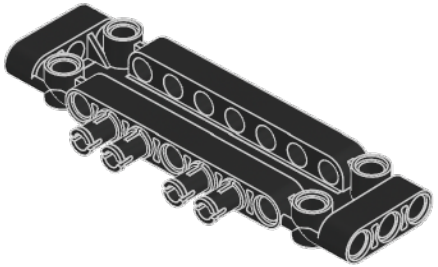

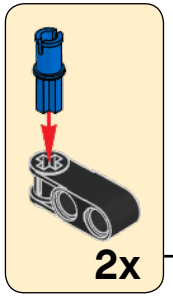

2

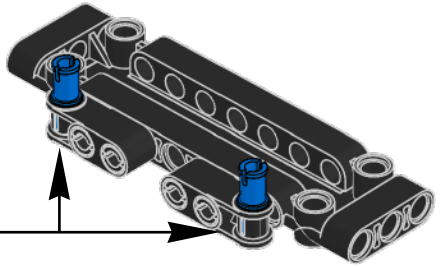

252

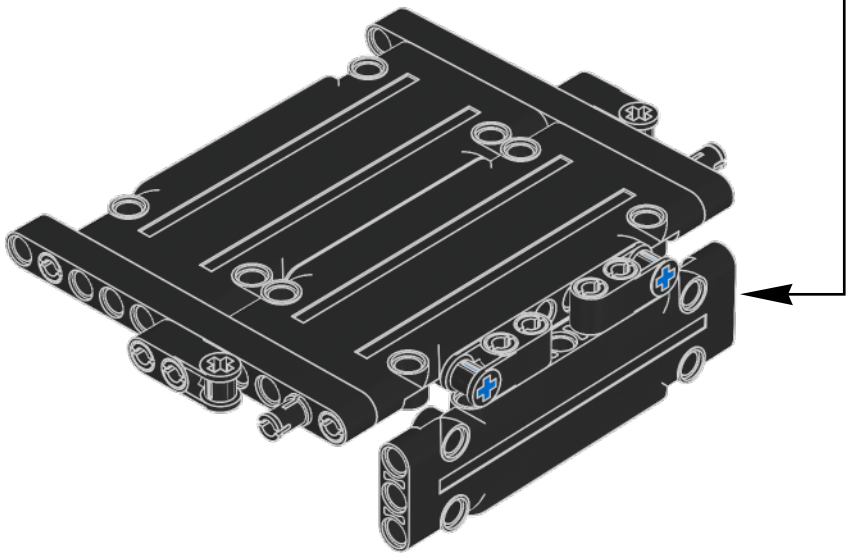

2x

253

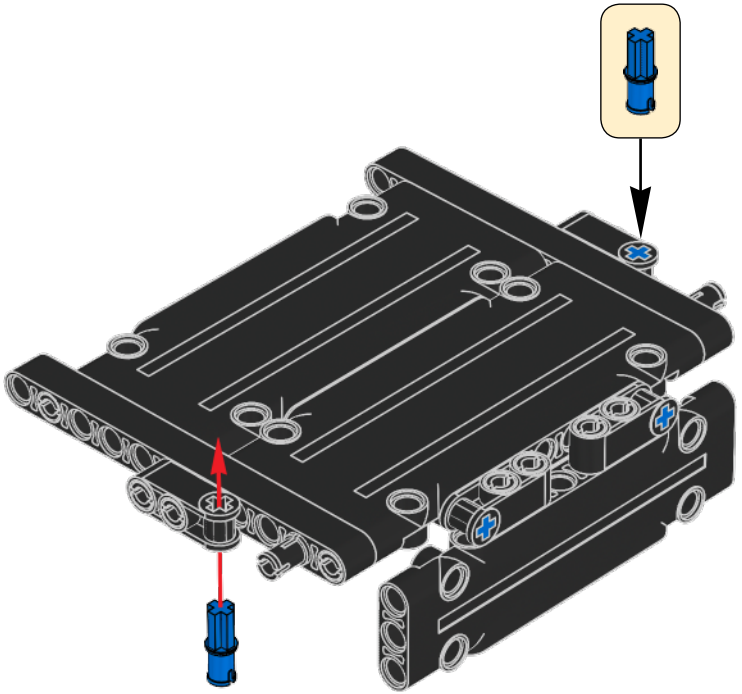

2x

254

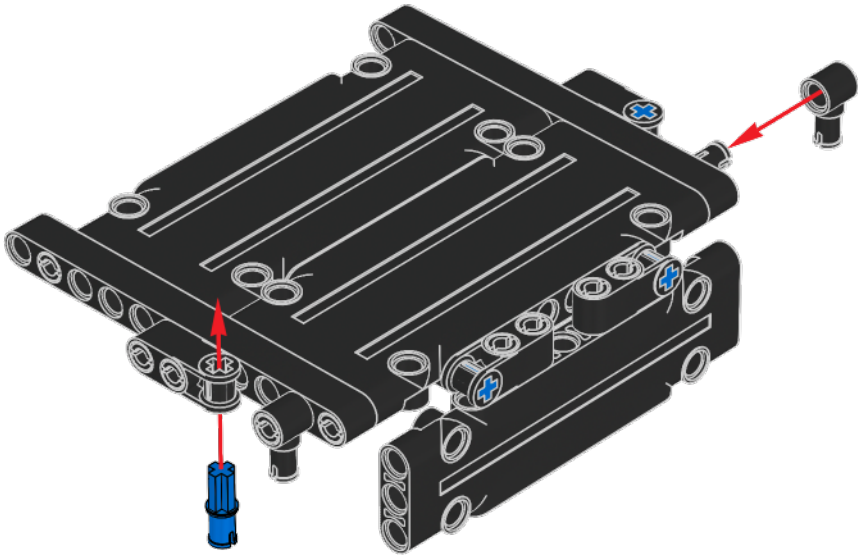

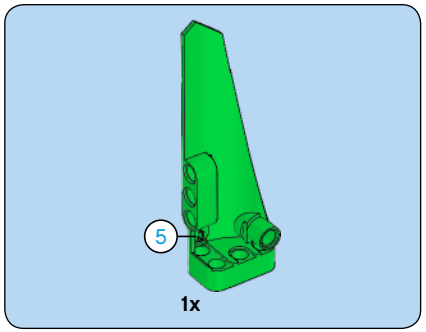
5
1x

255

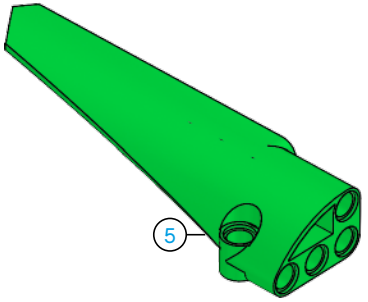
5

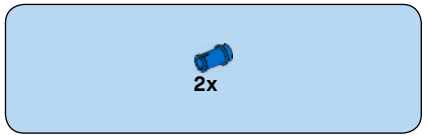
2x

256

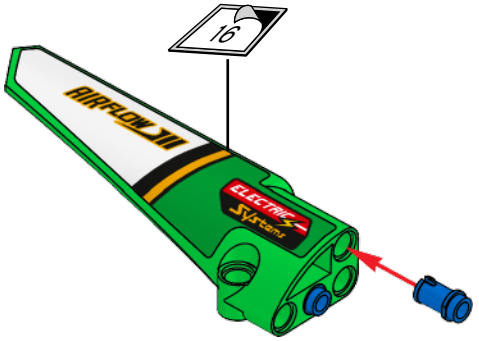
16
AIRFLOW III
ELECTRIC
SYSTEMS

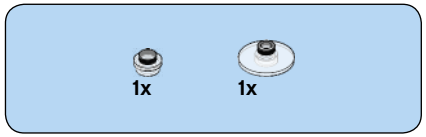
1x
1x

257

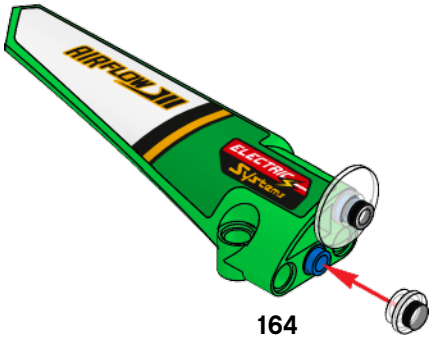
AIRFLOW III
ELECTRIC
SYSTEMS

258

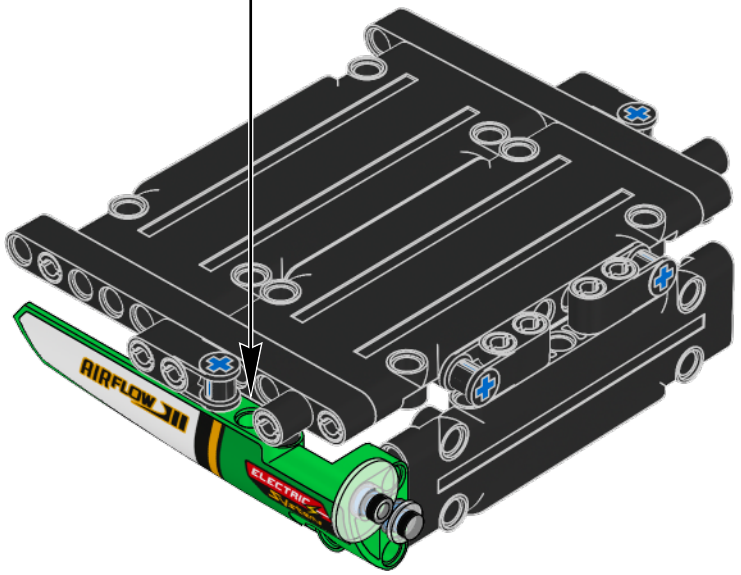

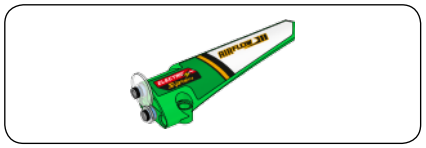

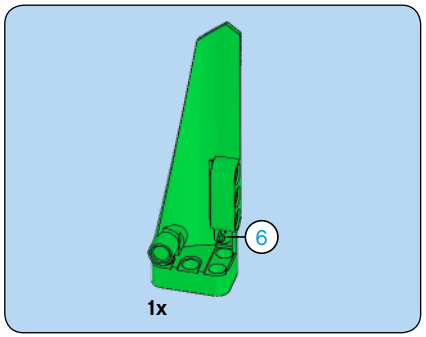
6
1x

259

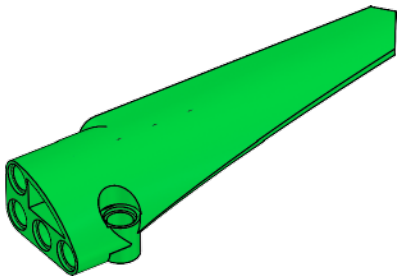

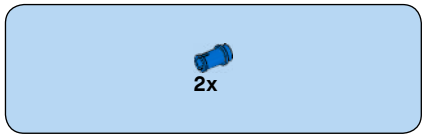
2x

260

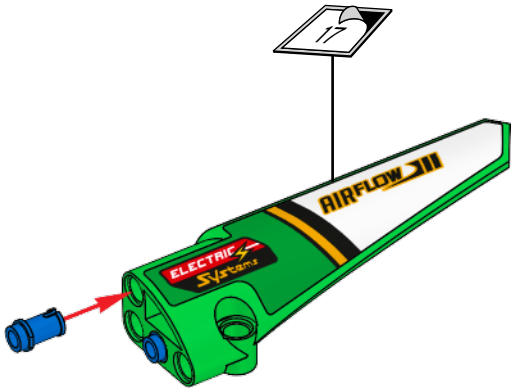
17
AIRFLOW III
ELECTRIC
SYstems

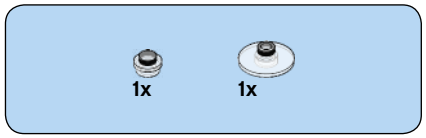
1x
1x

261

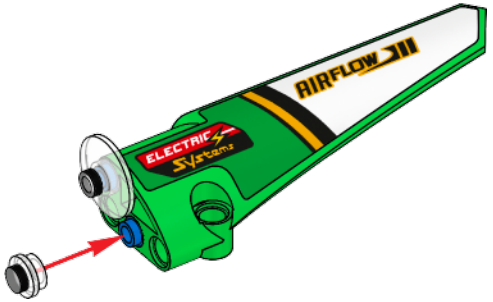
AIRFLOW III
ELECTRIC
SYstems

262

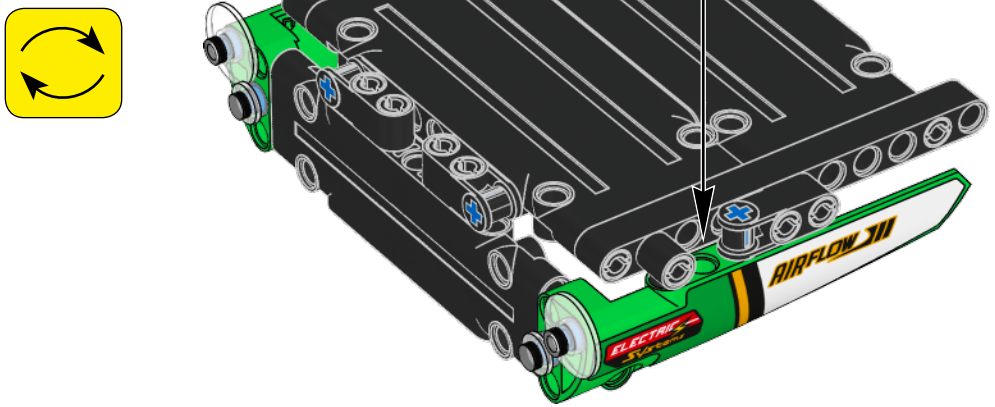

263

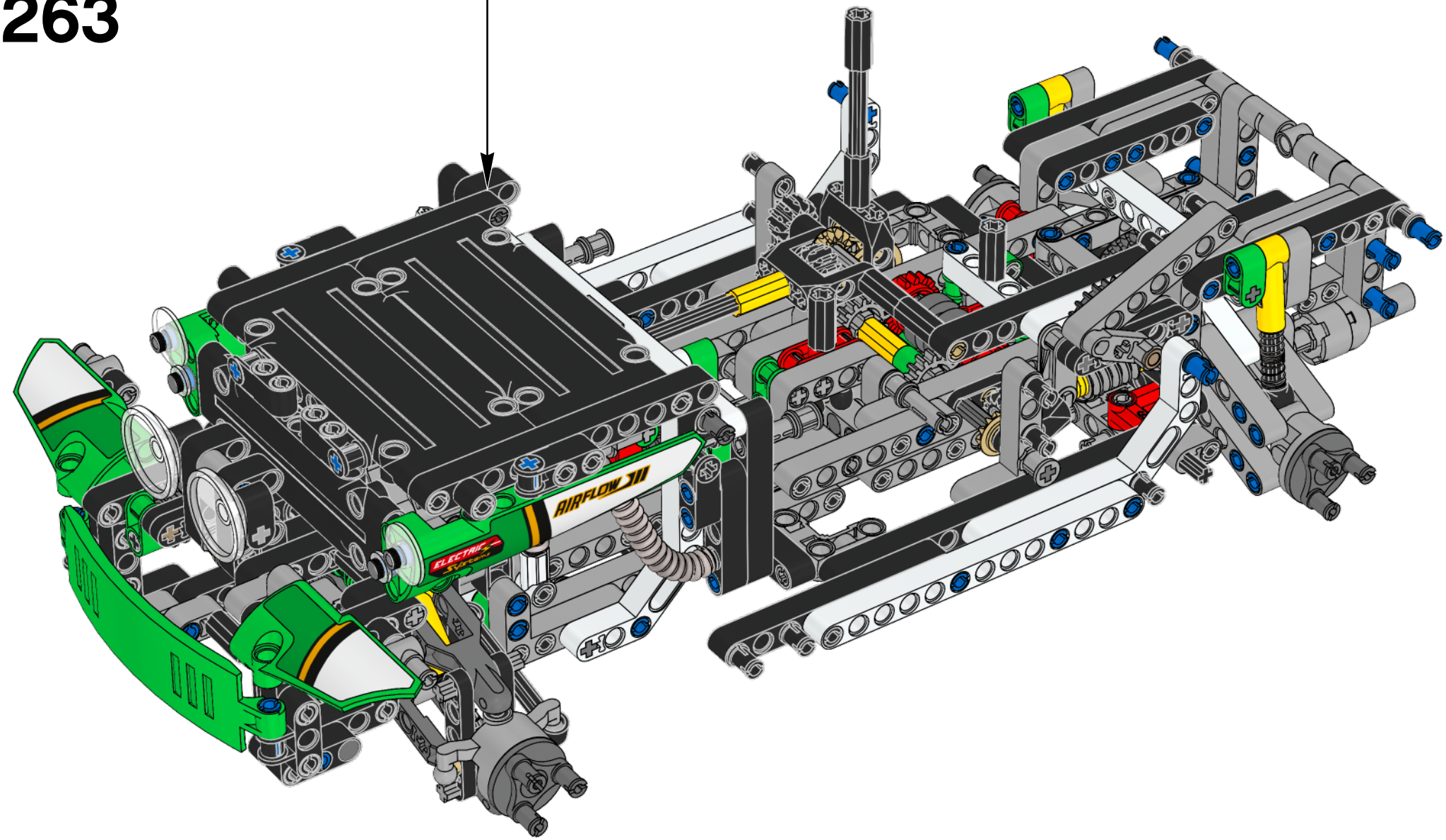

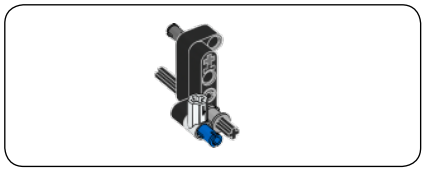

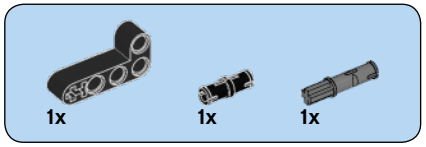

264

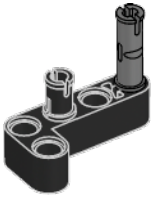

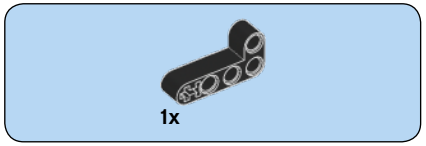

265

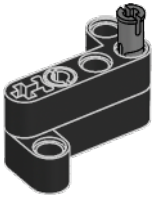

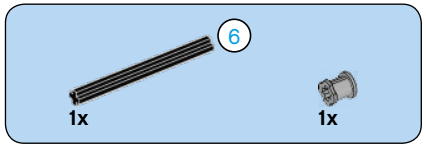

266

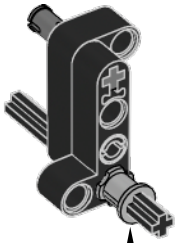

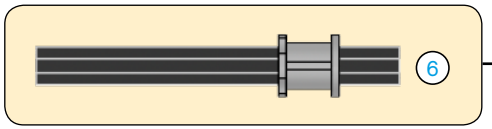

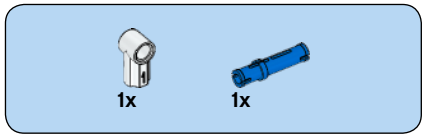

267

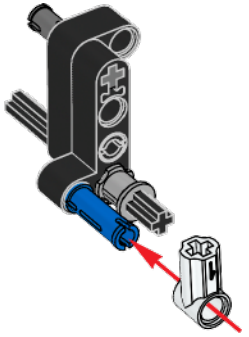

268

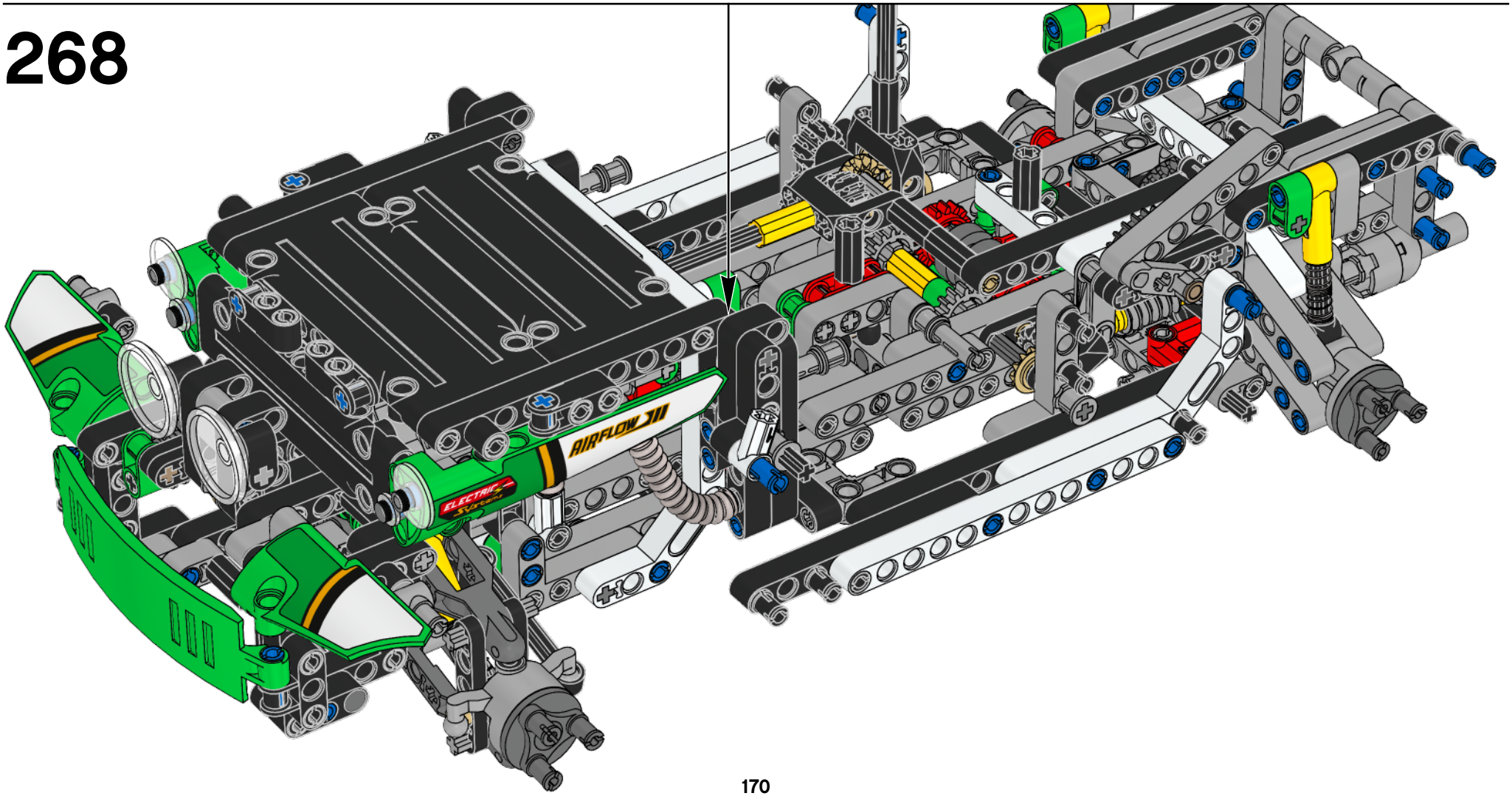

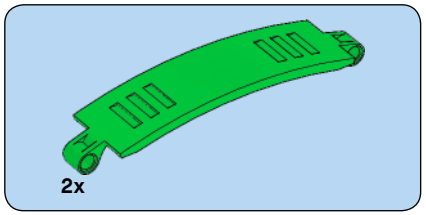

269

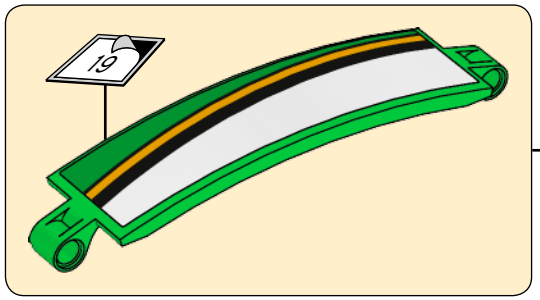

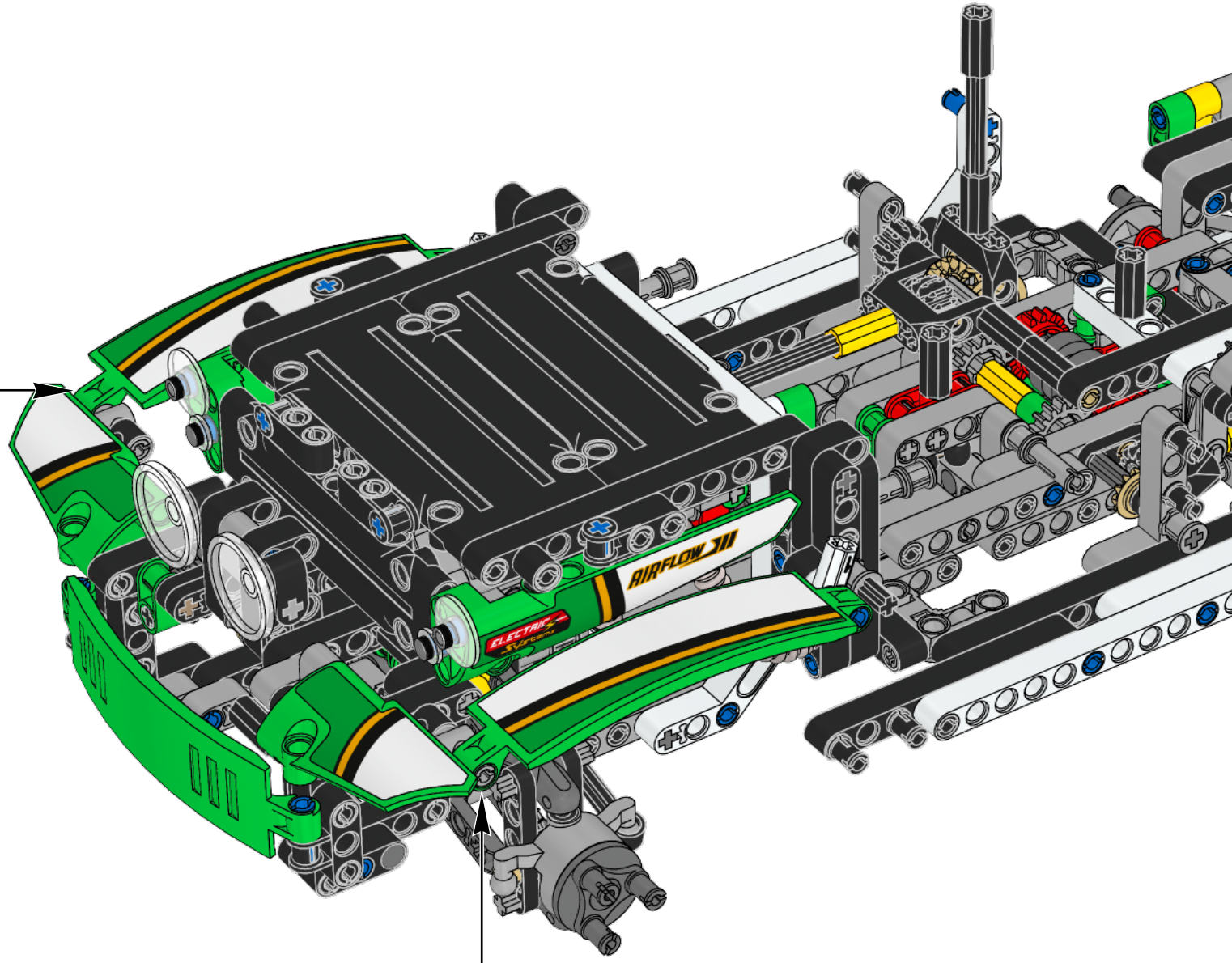

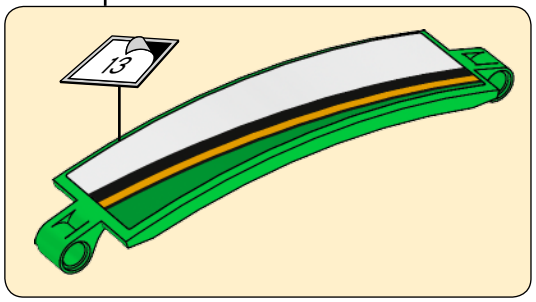

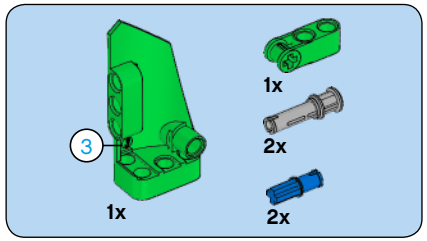

270

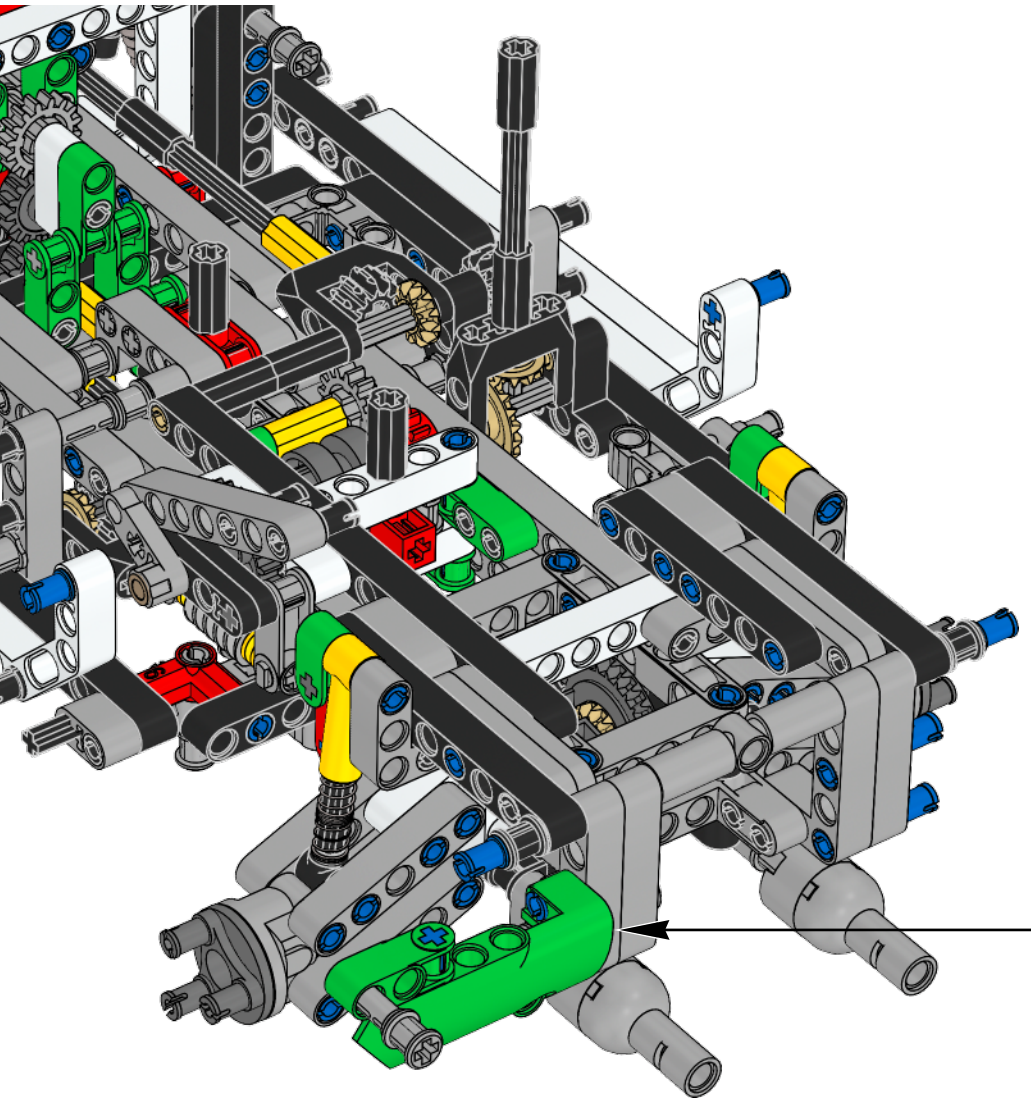

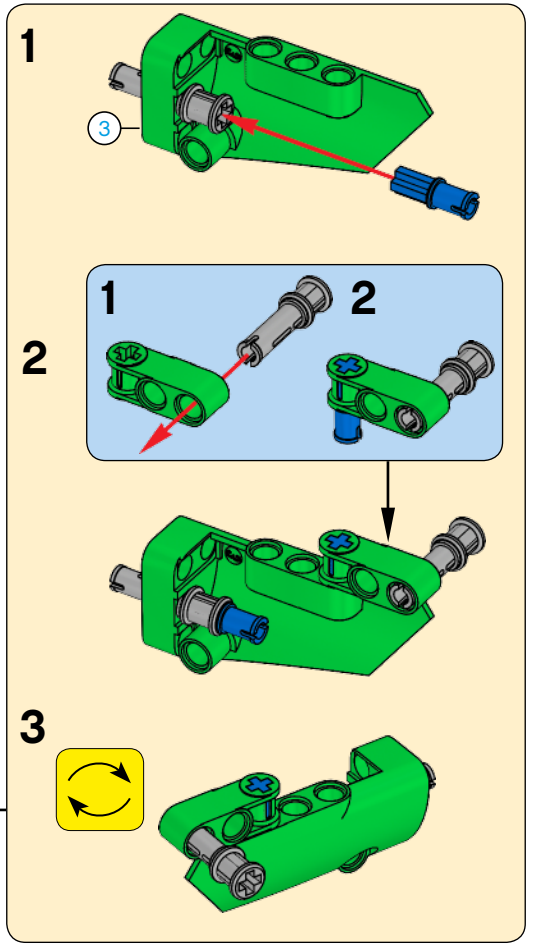

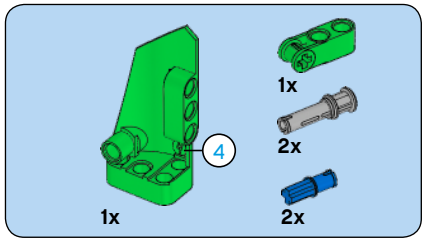

271

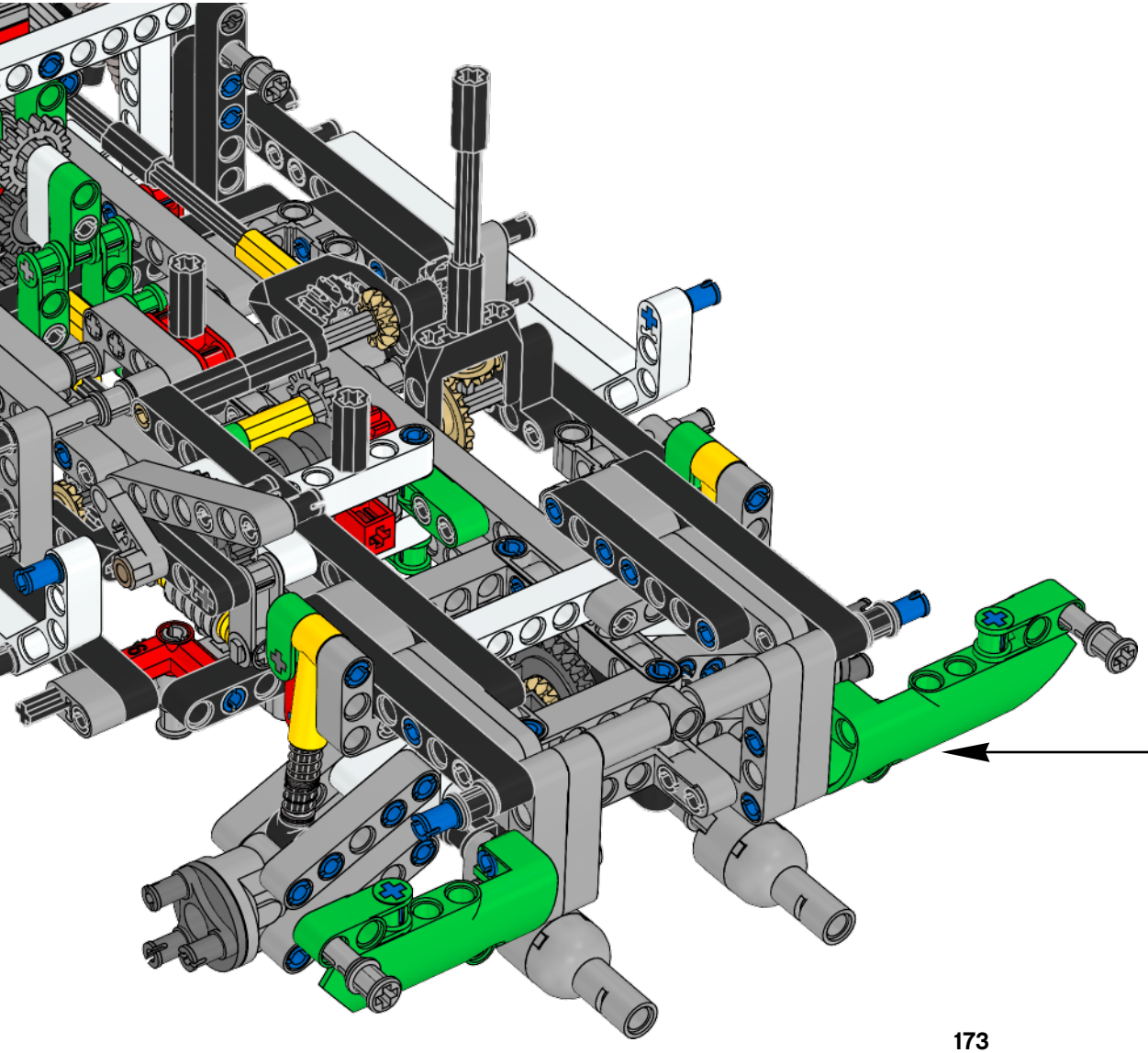

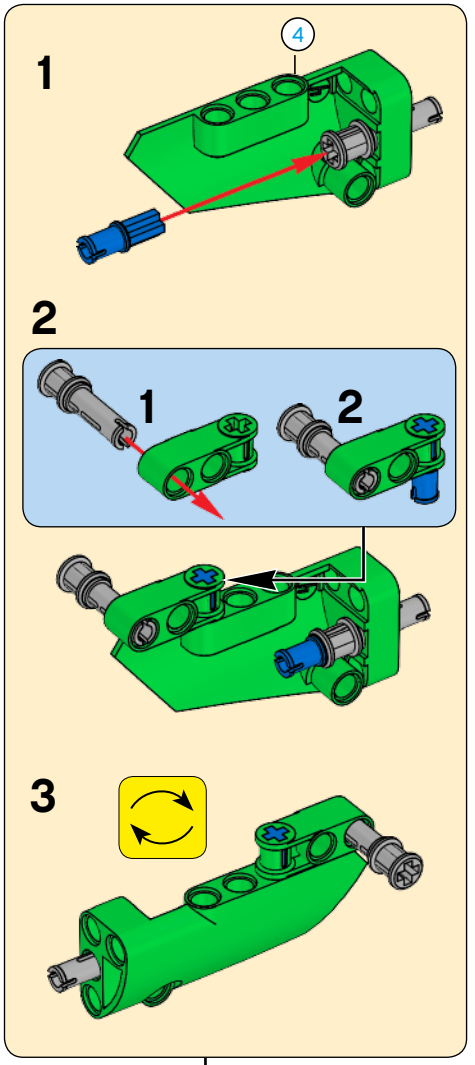

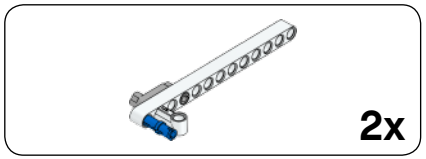

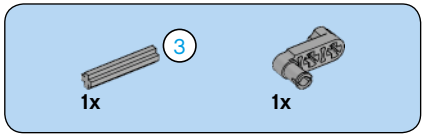

272

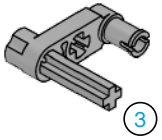

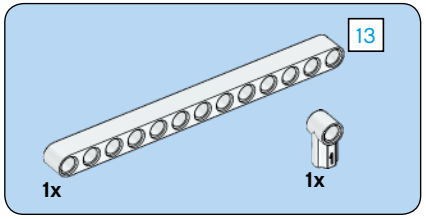

273

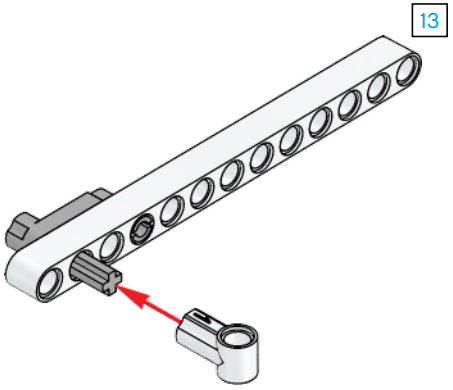

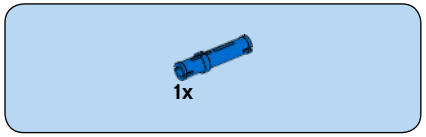

274

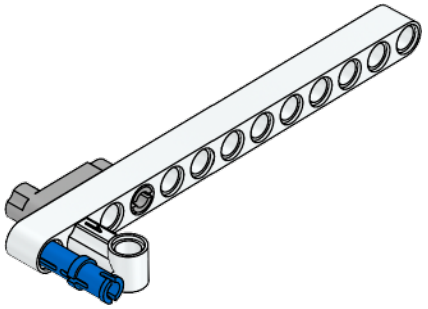

2x

275

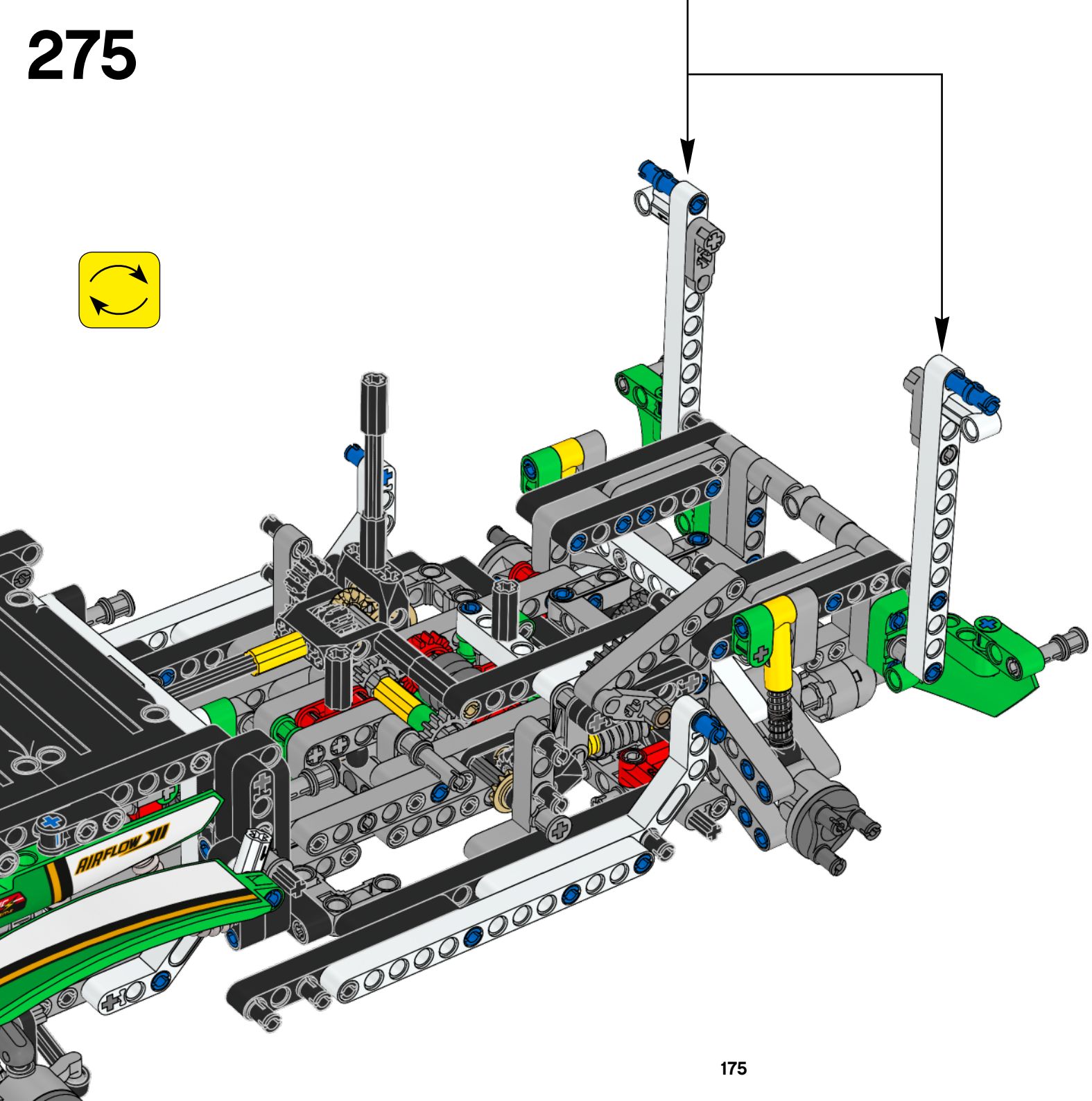

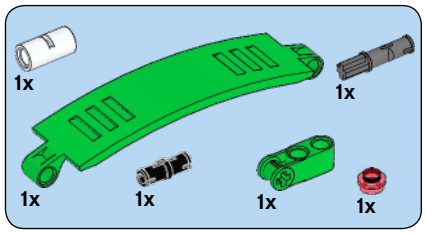

276

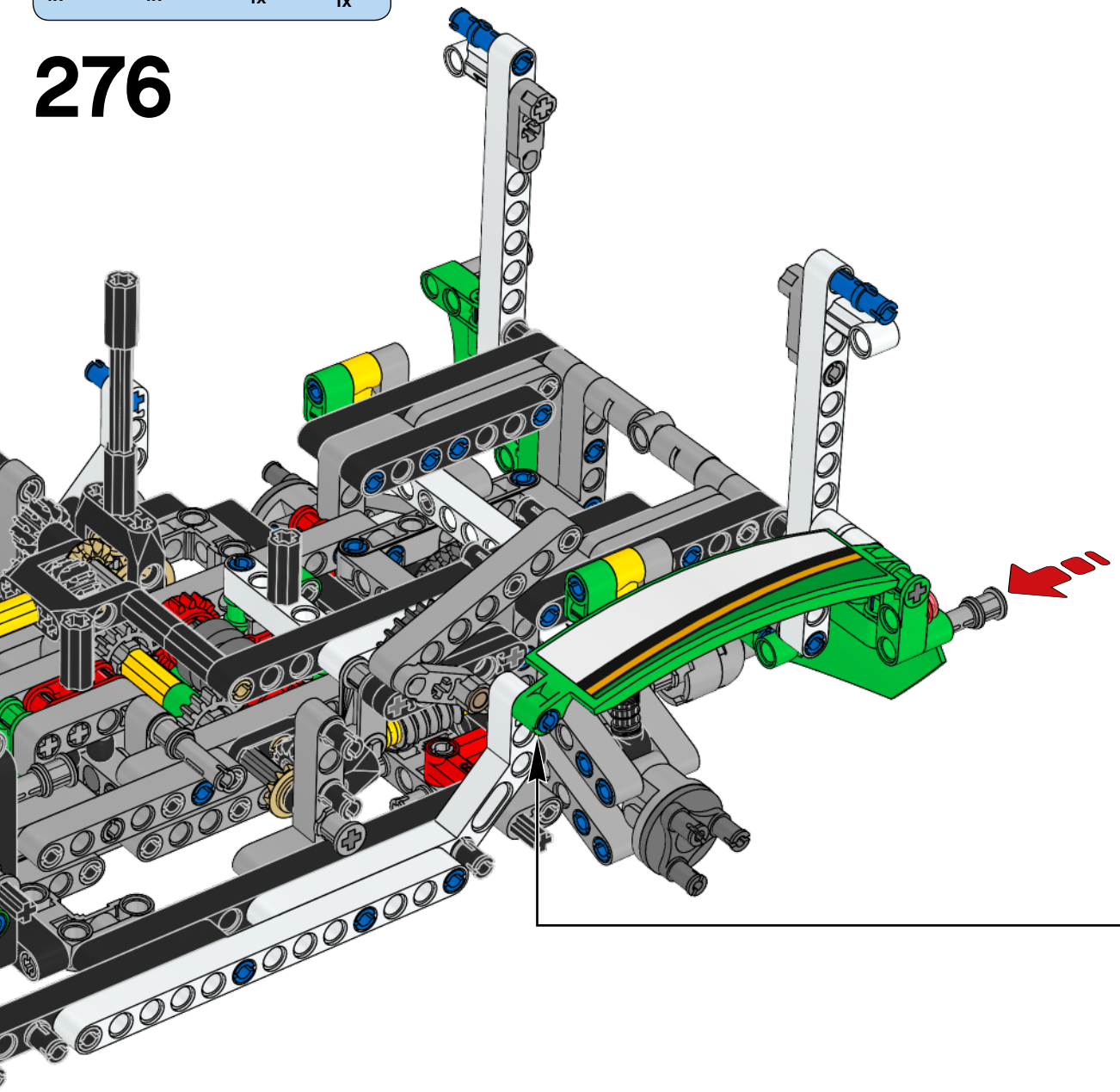

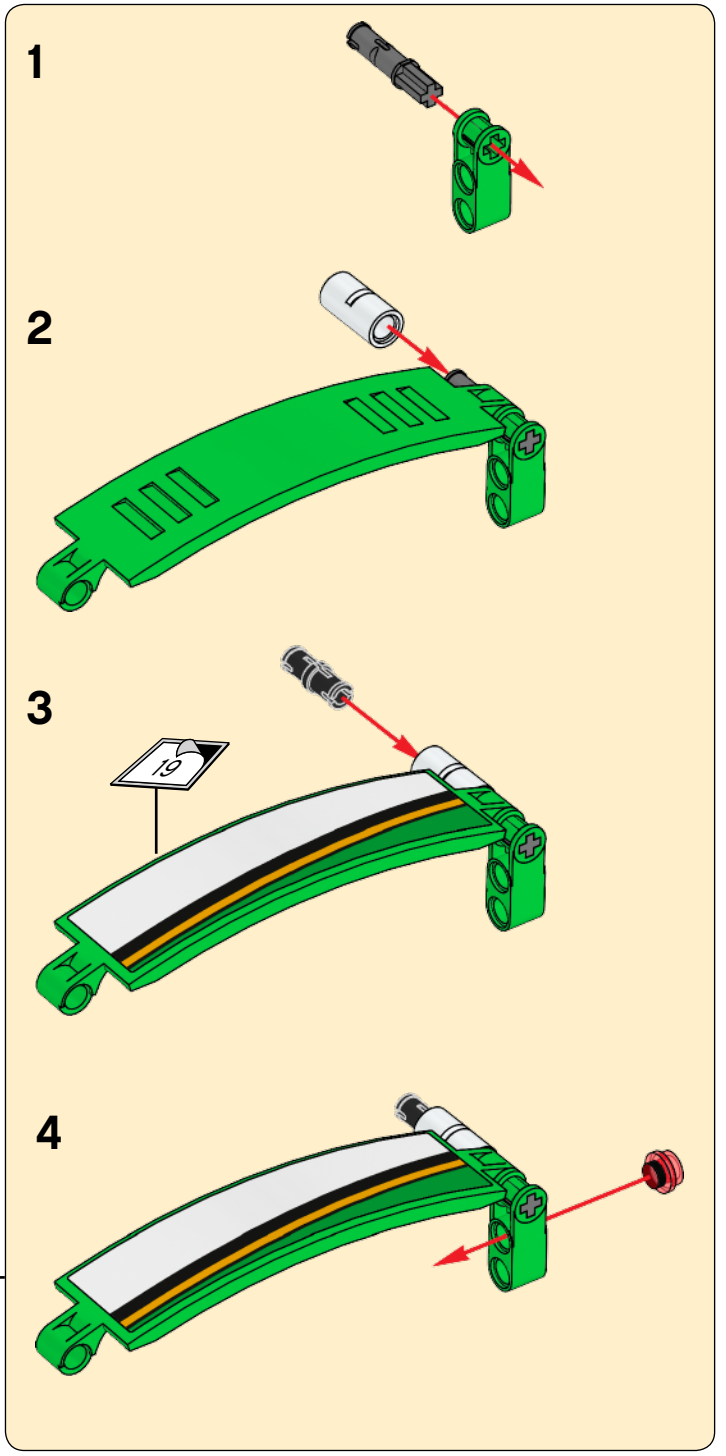

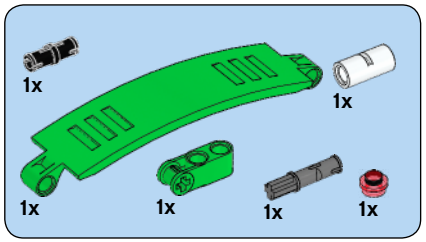

277

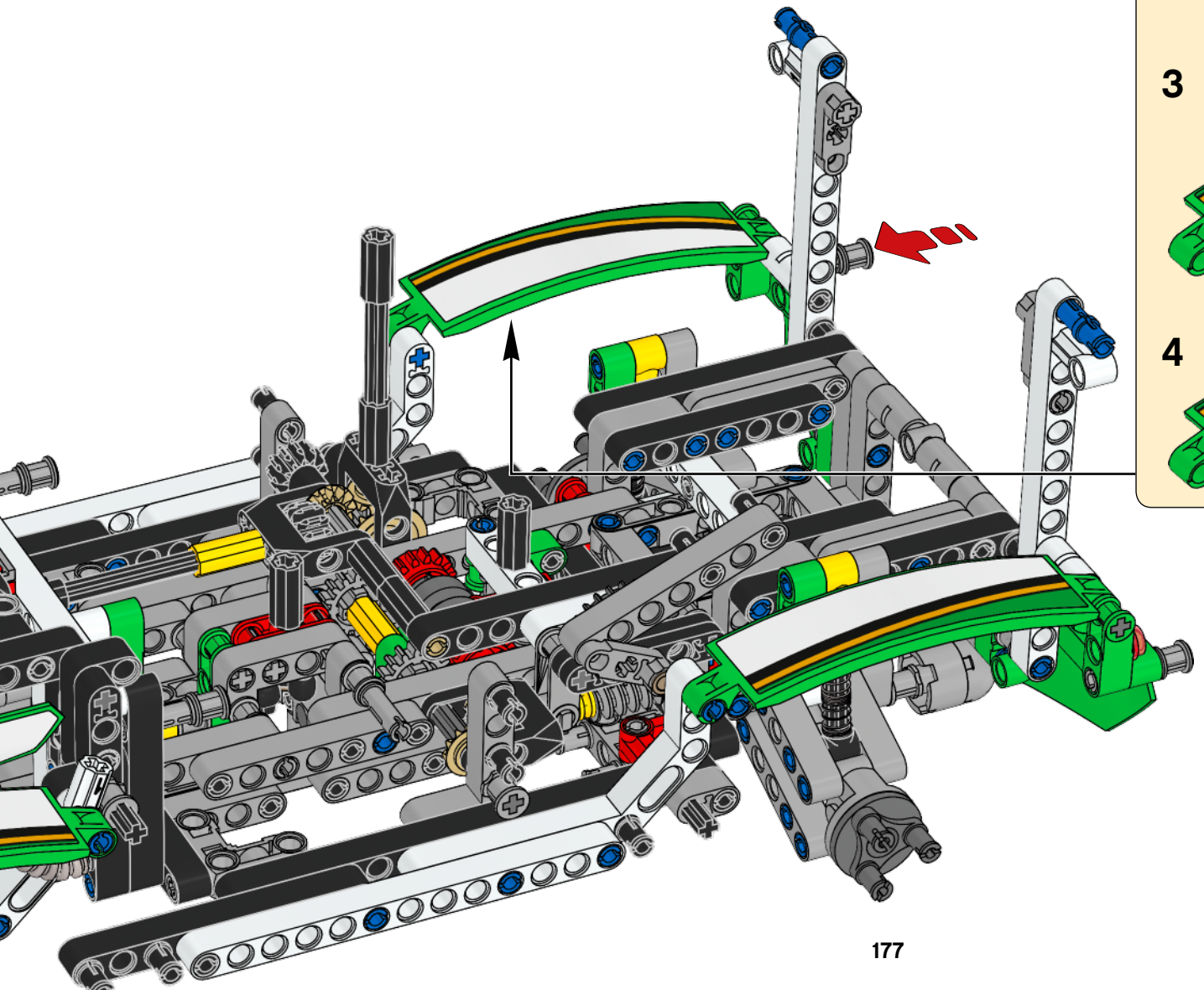

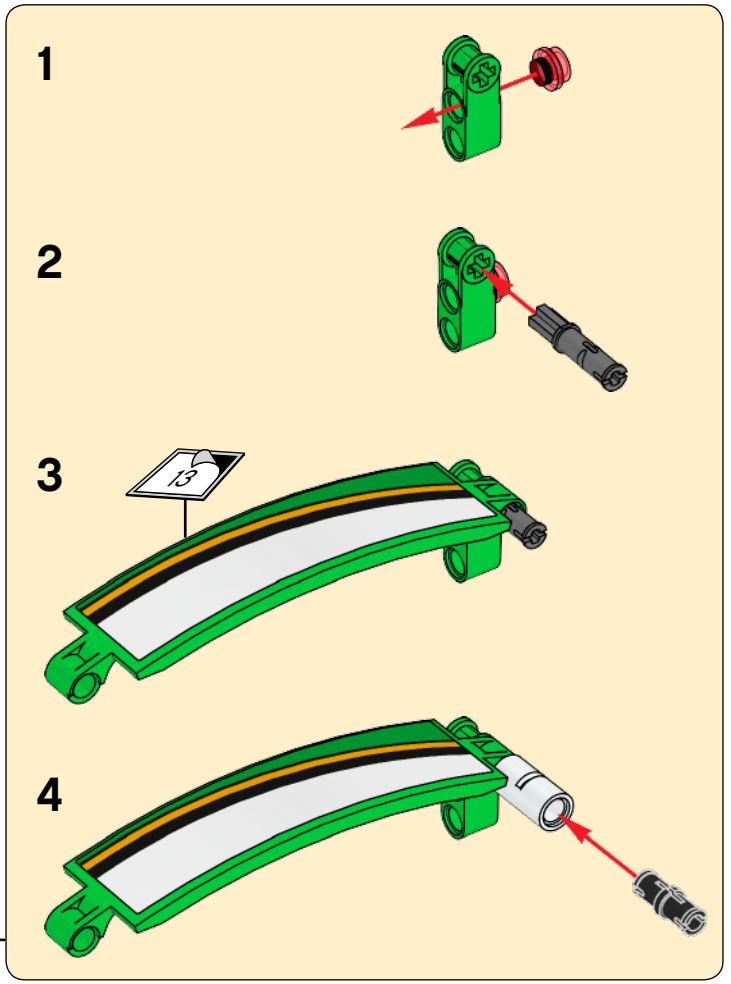

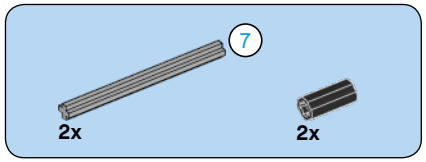

278

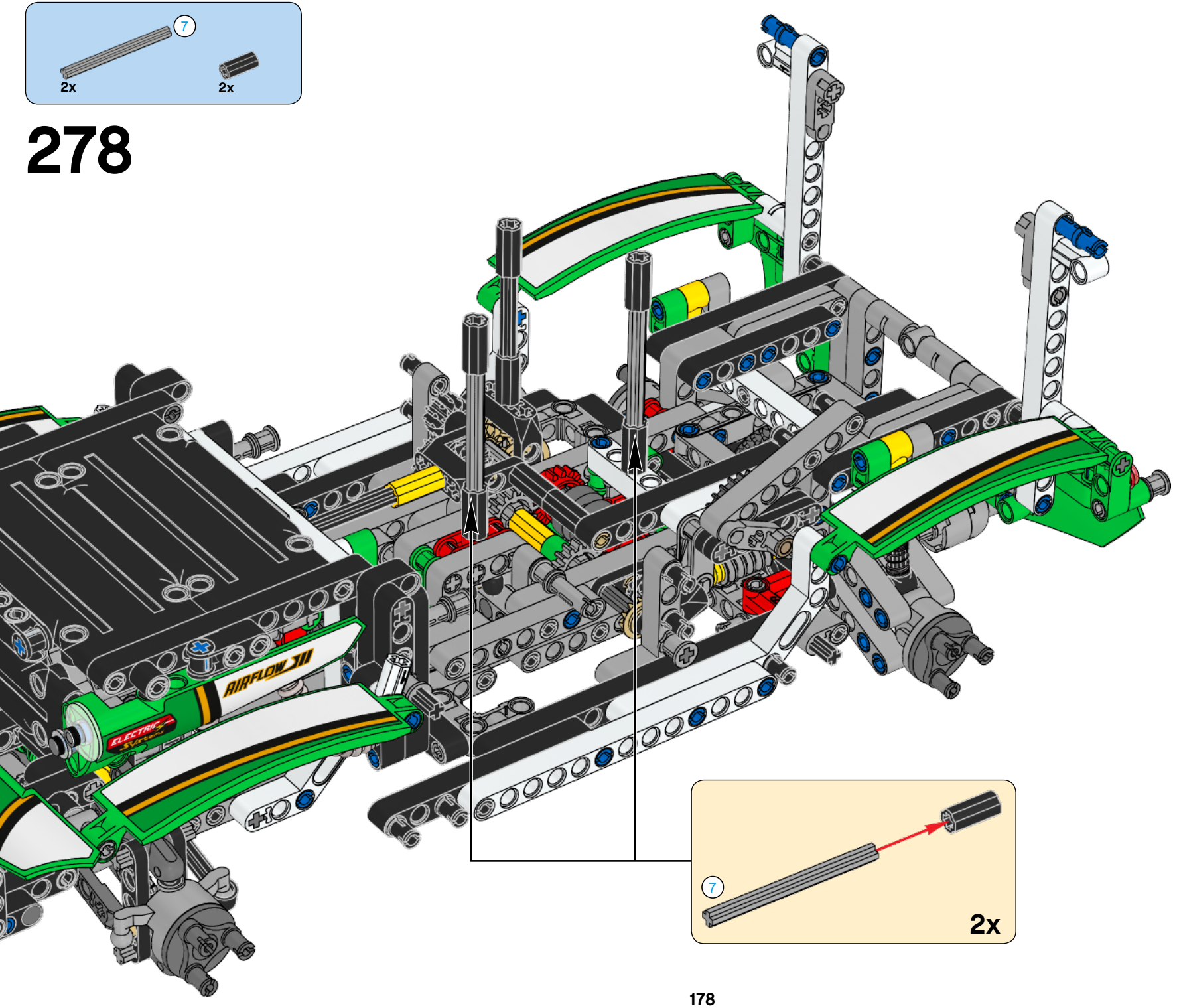

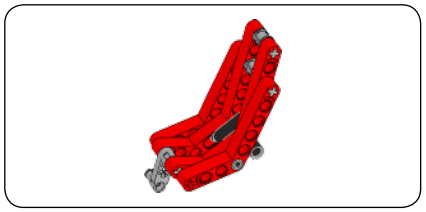

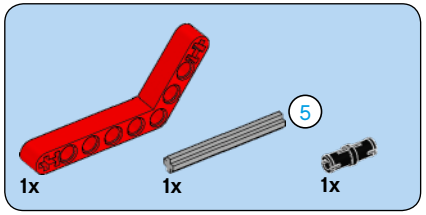

279

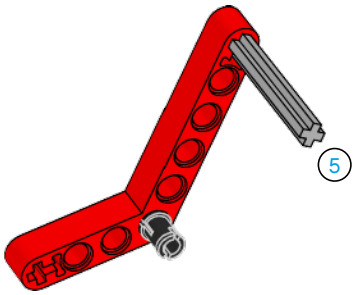

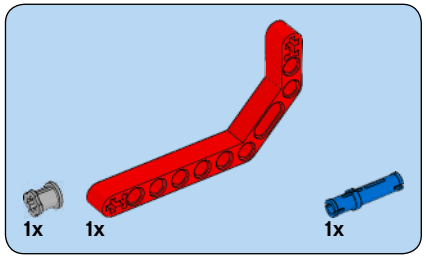

280

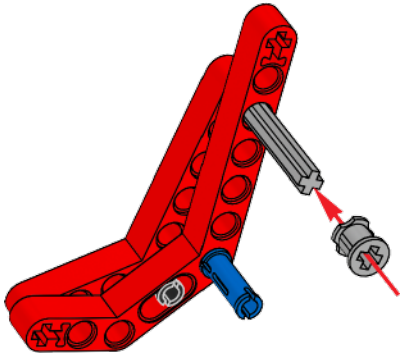

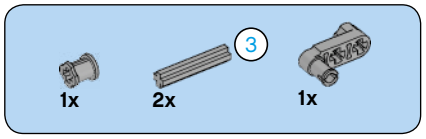

281

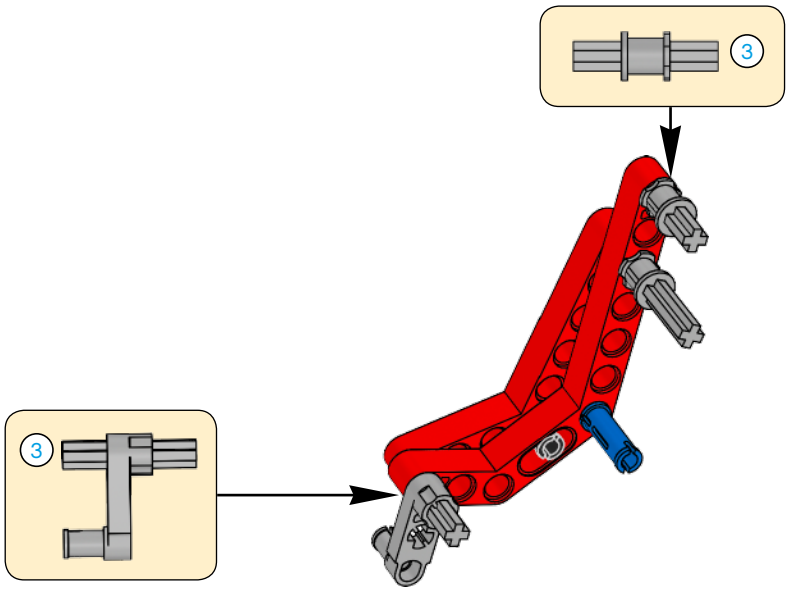

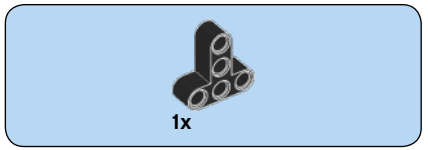

282

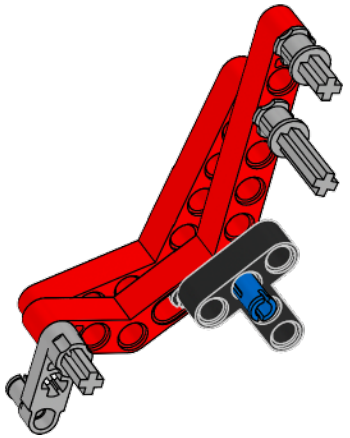

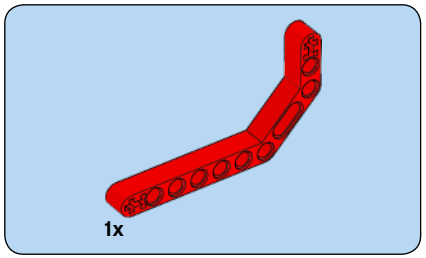

283

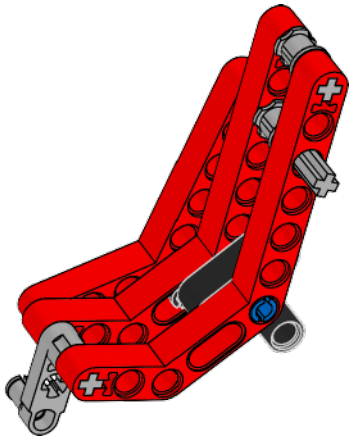

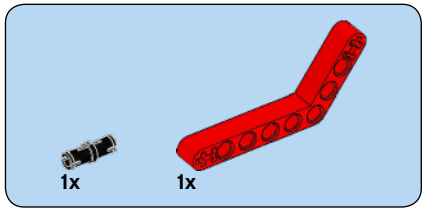

284

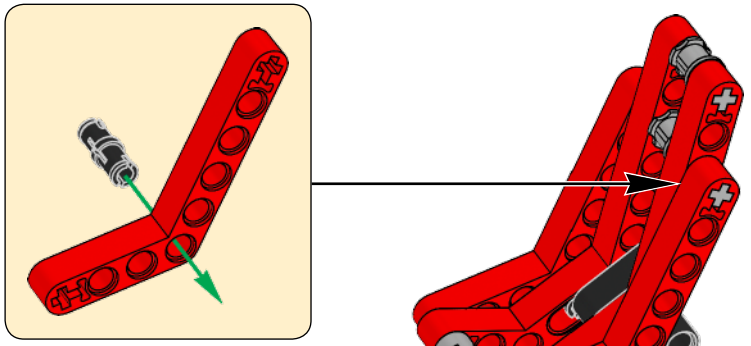

285

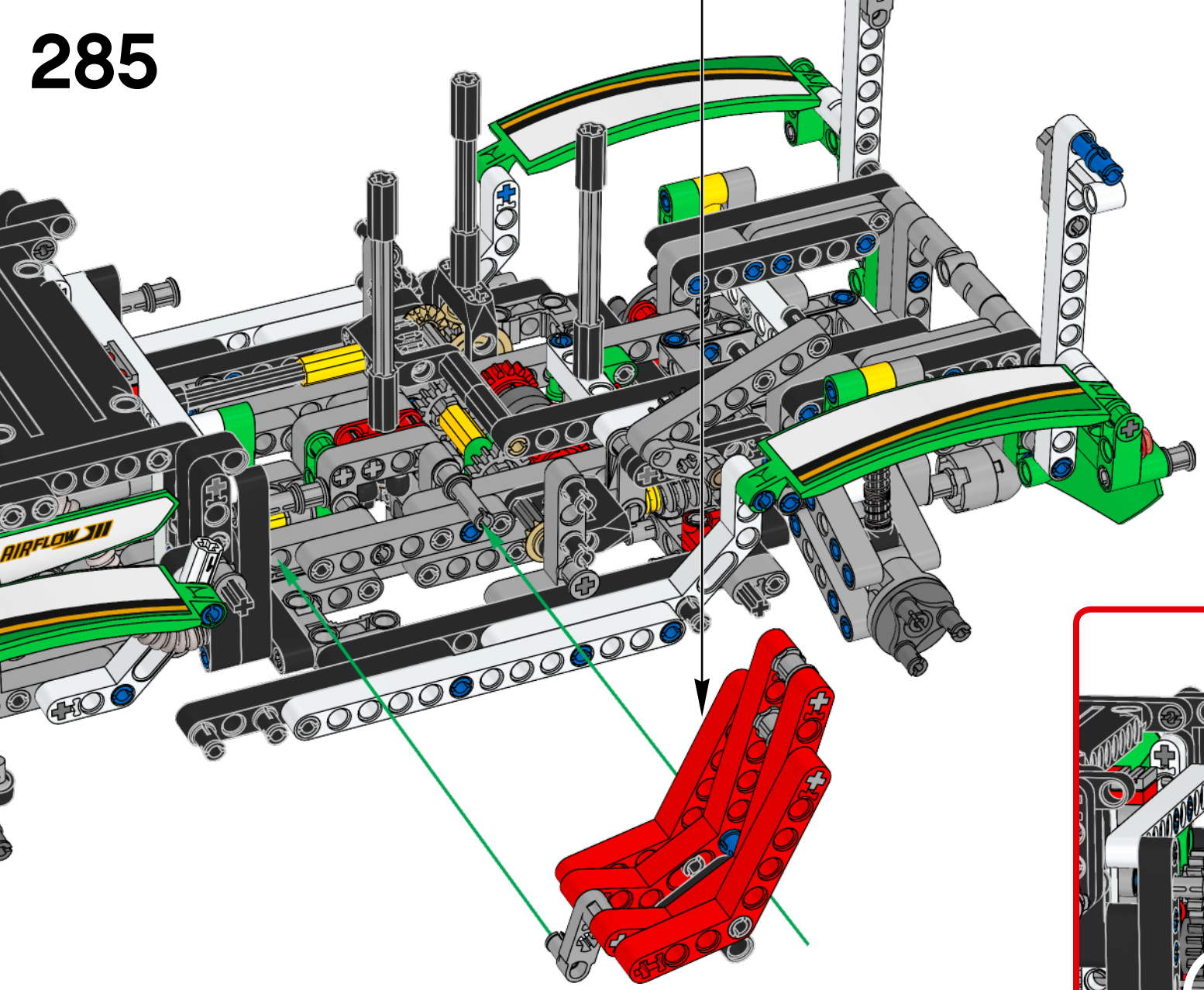

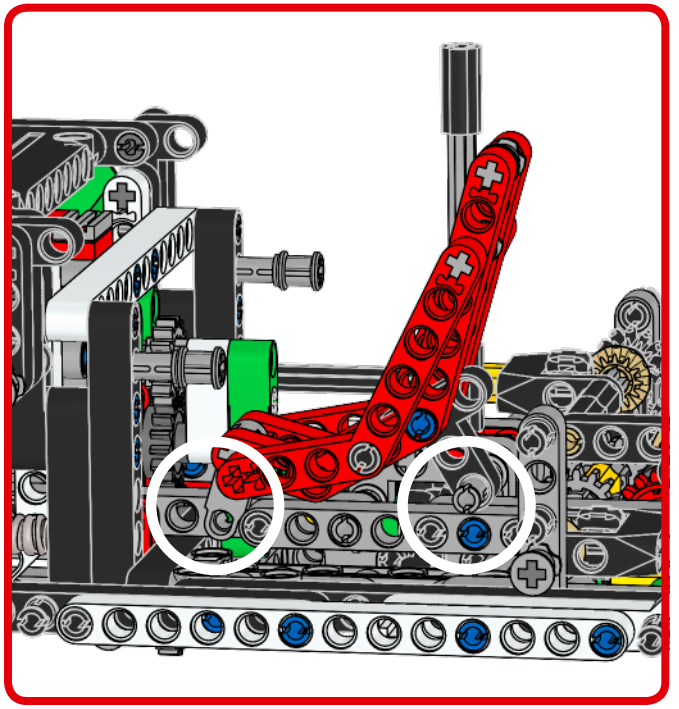

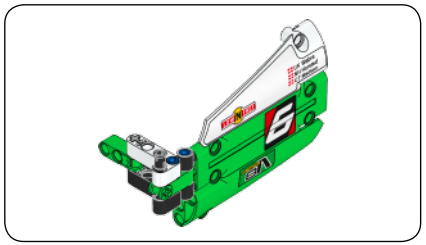

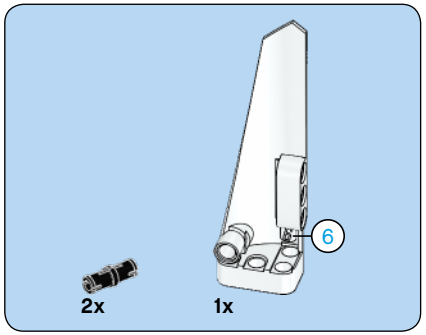

286

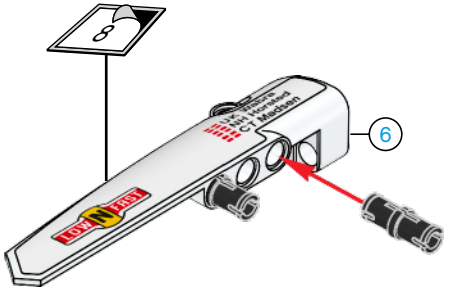

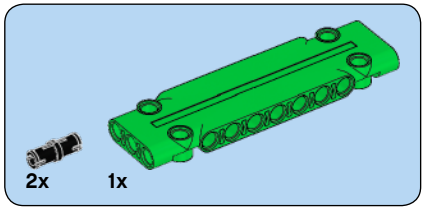

287

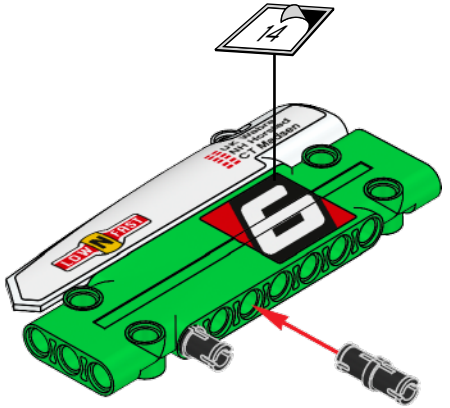

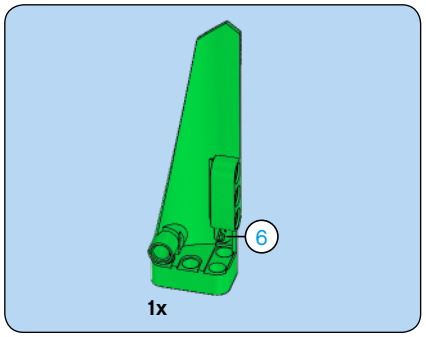

288

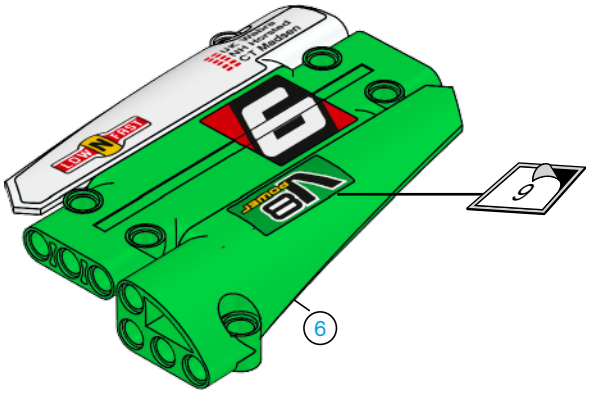

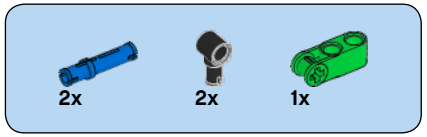

289

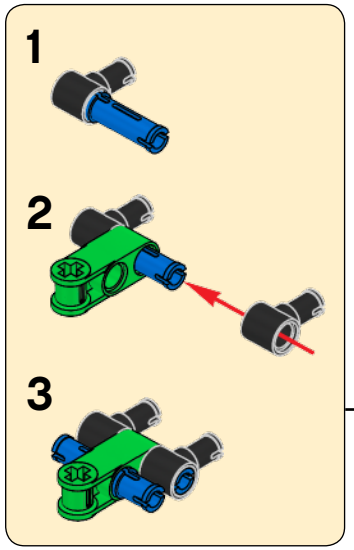

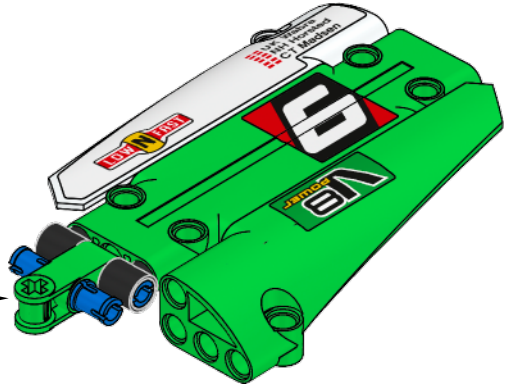

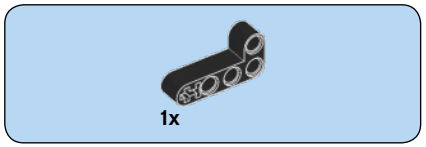

290

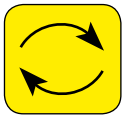

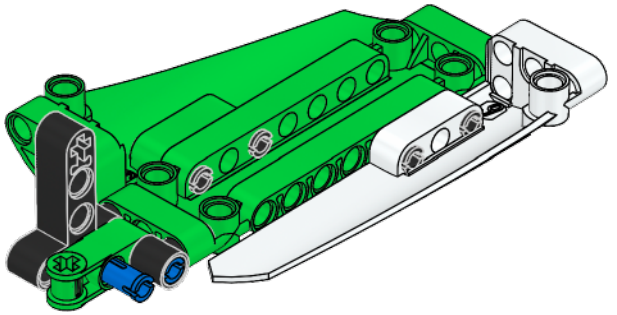

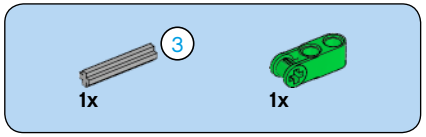

291

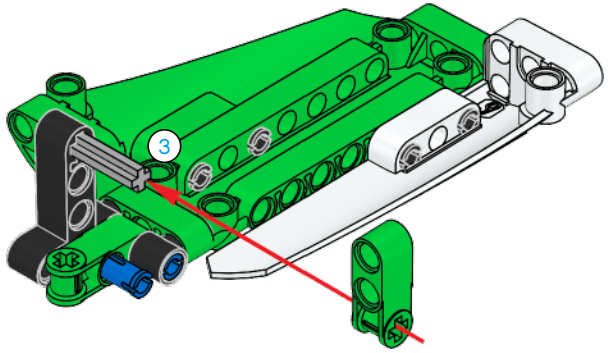

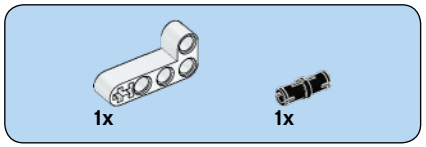

292

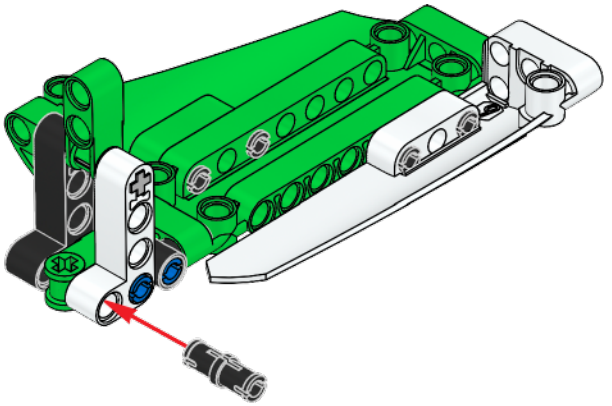

293

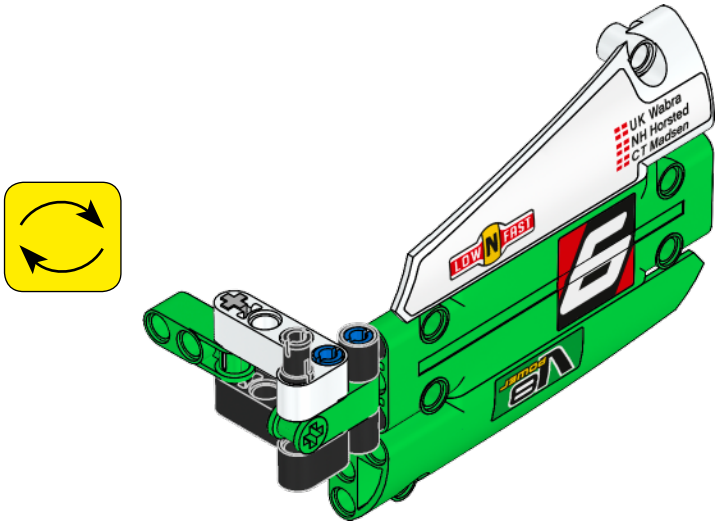

294

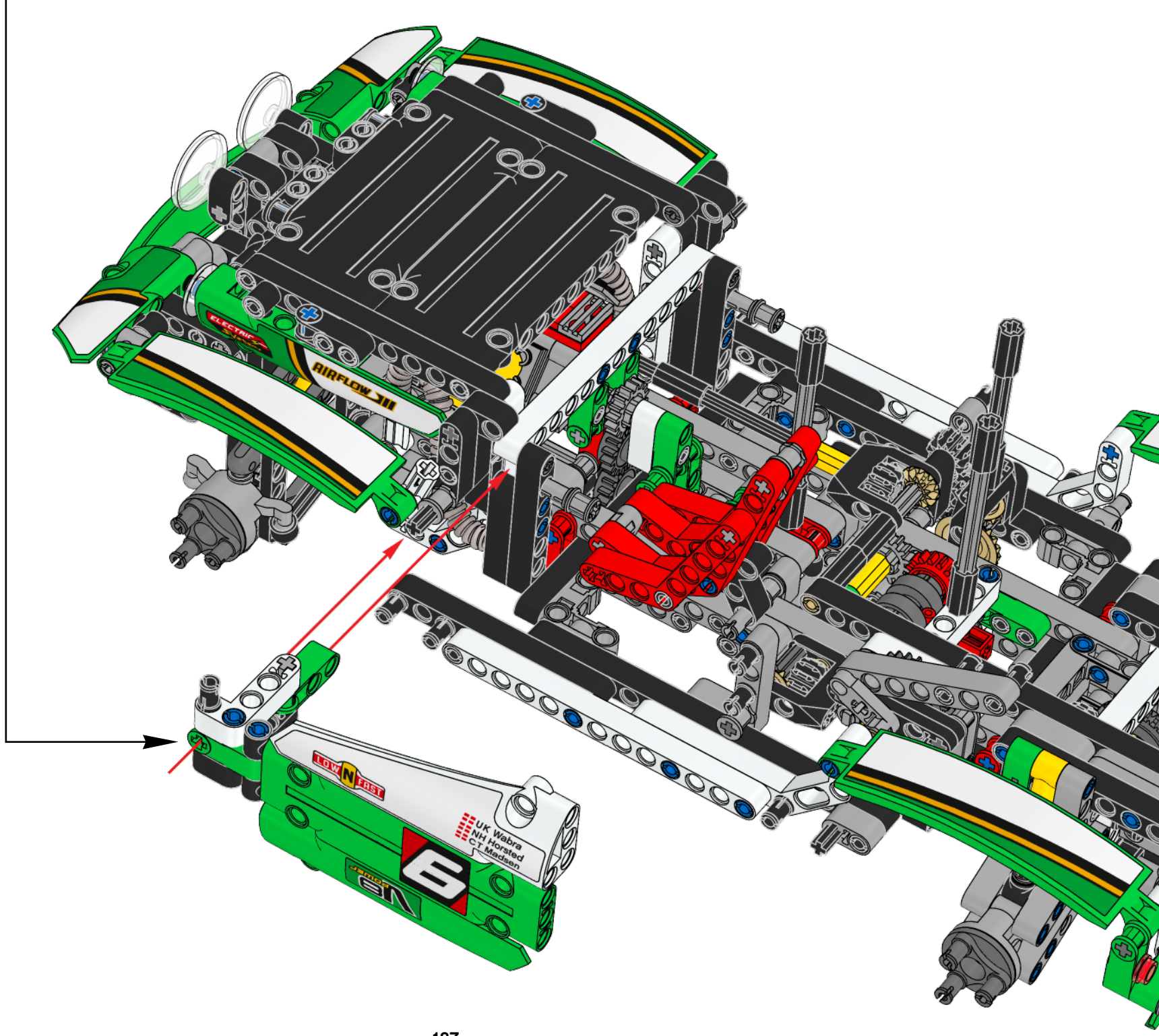

295

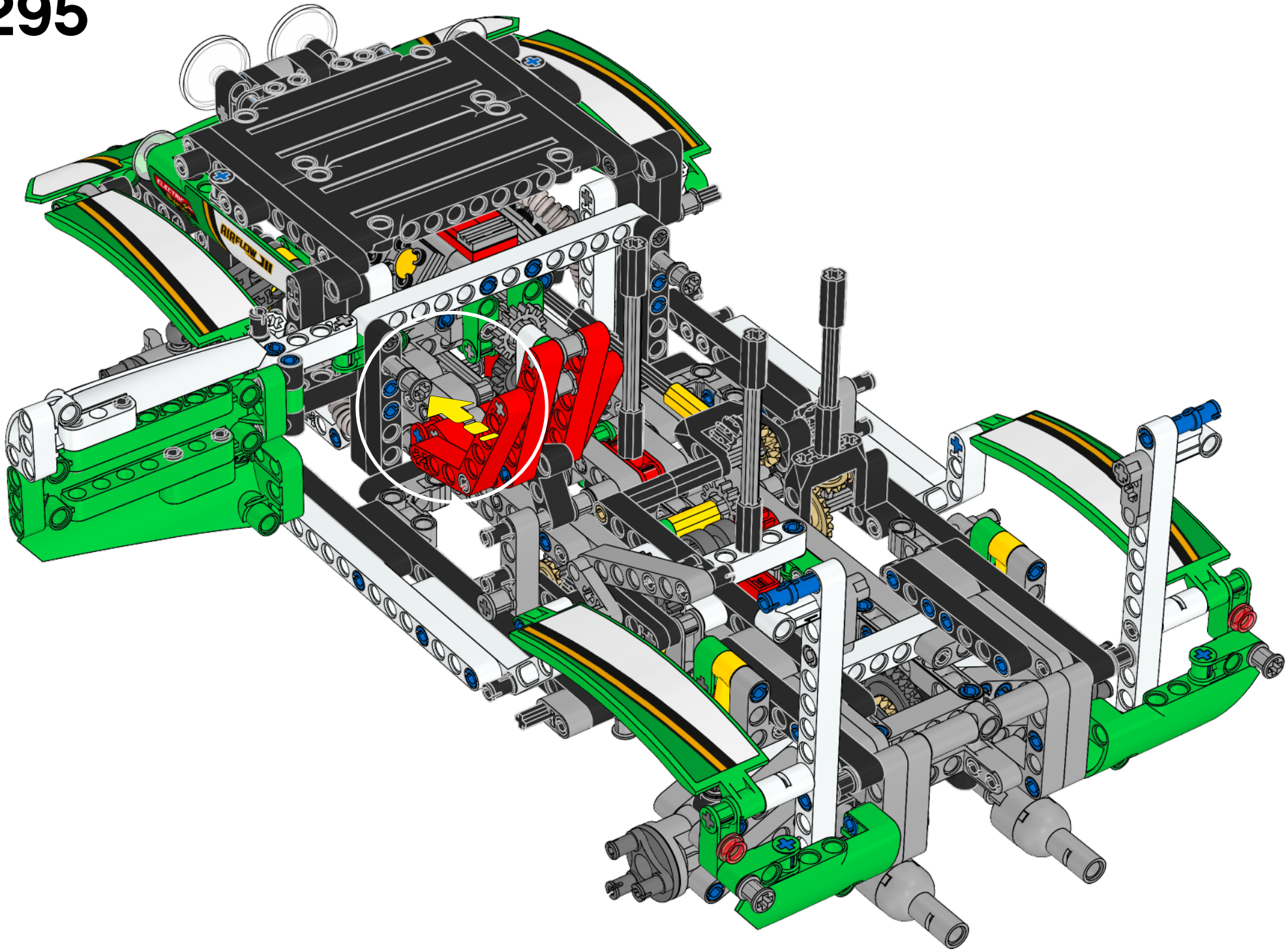

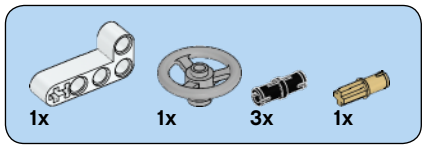

296

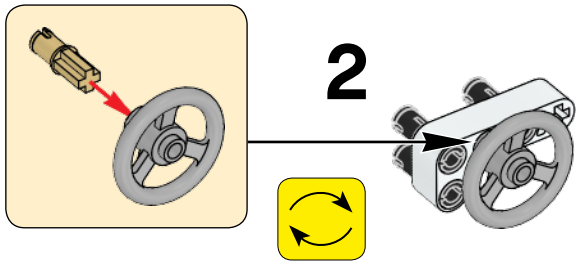

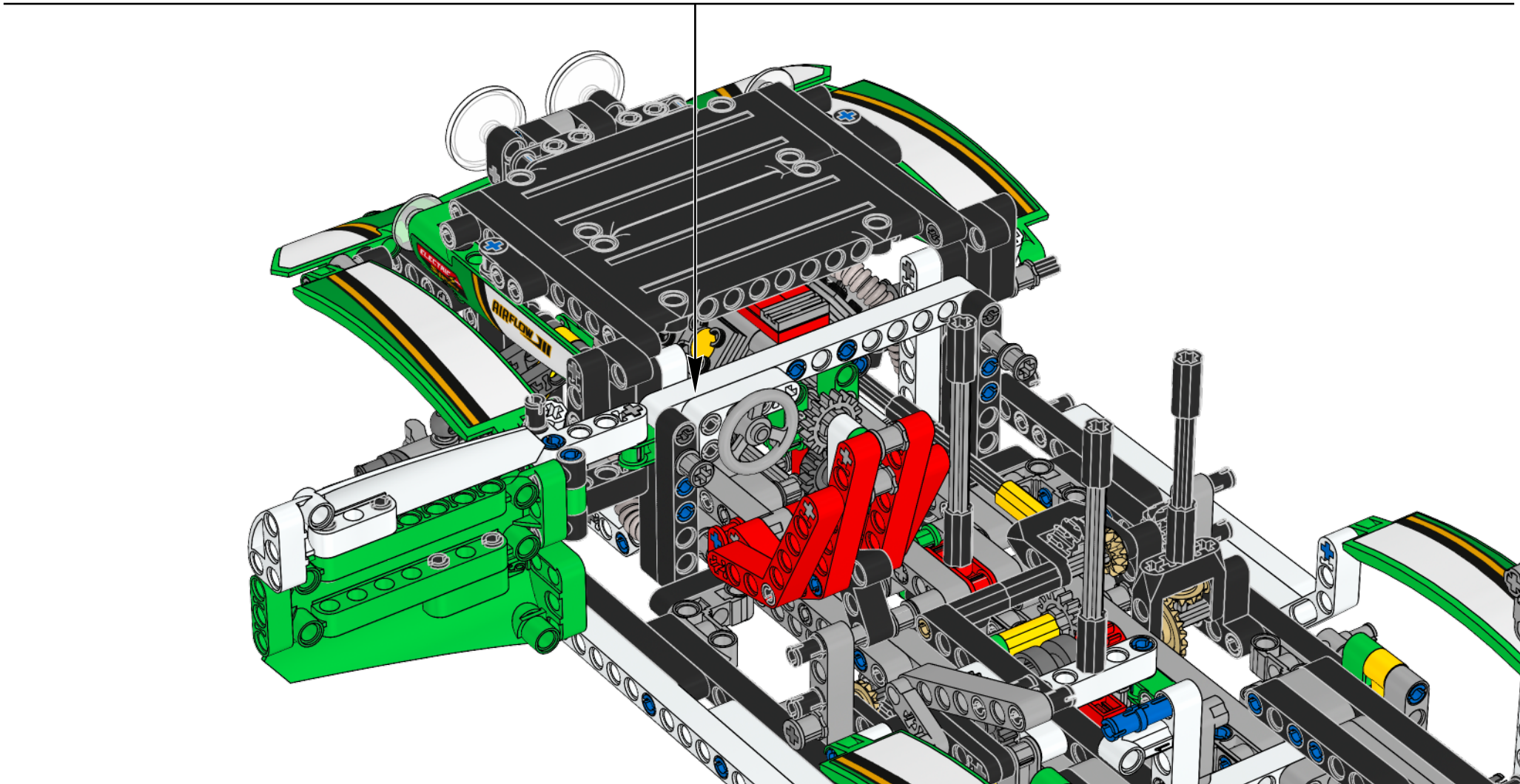

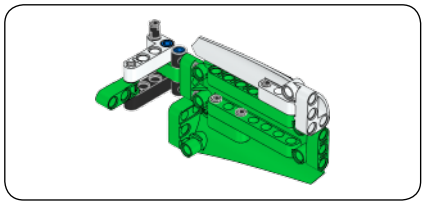

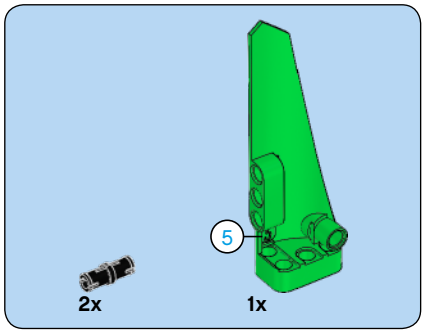

297

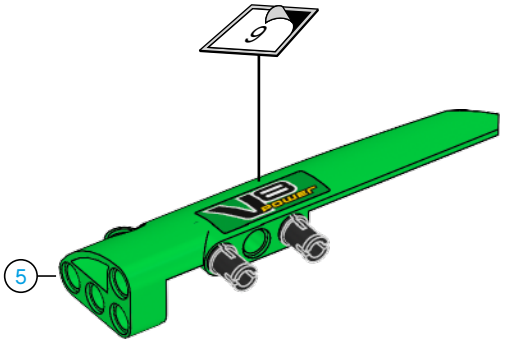

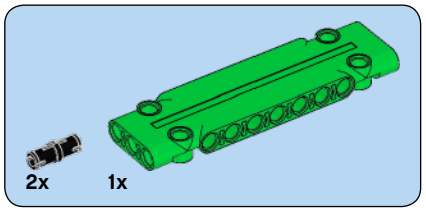

298

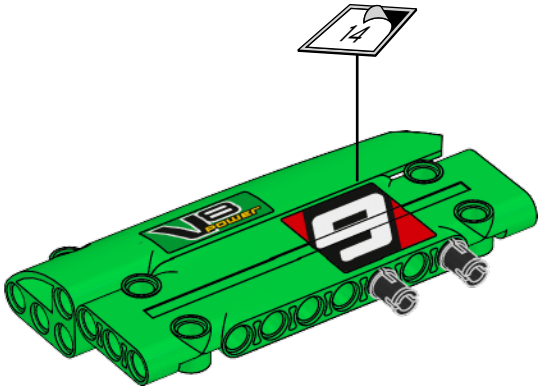

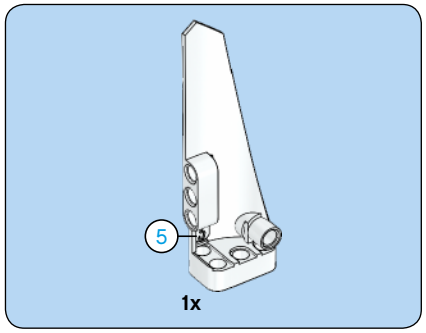

299

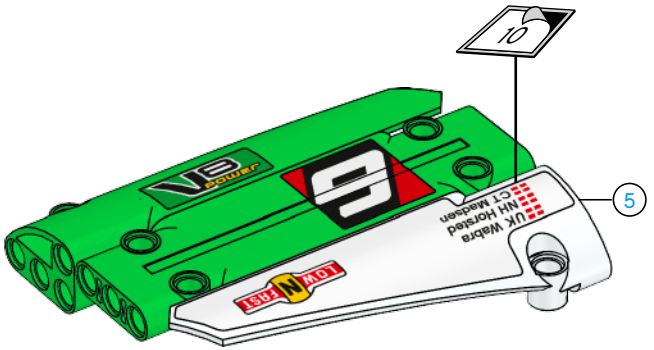

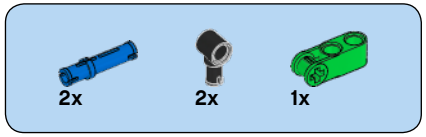

300

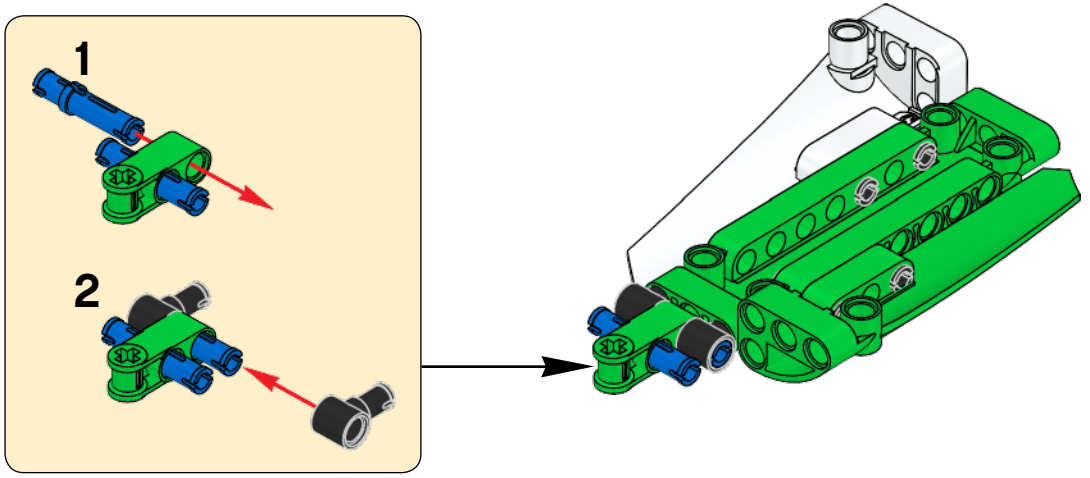

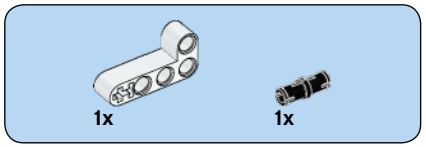

301

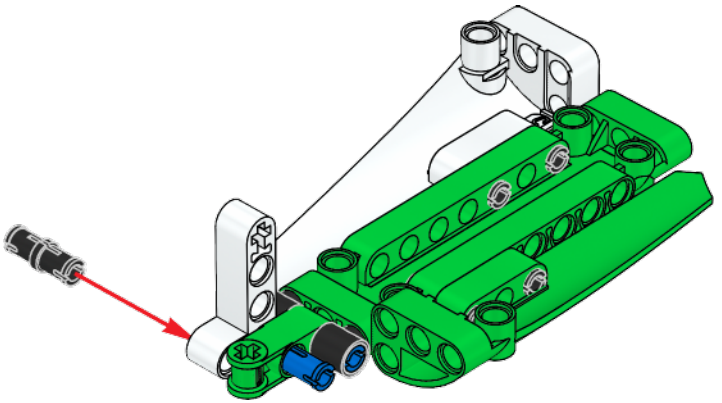

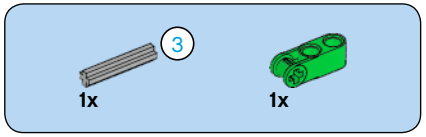

302

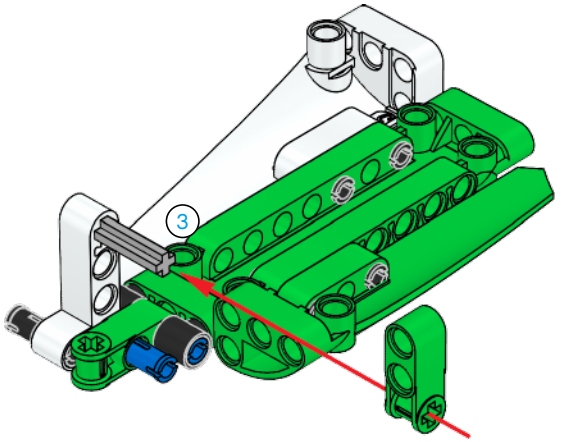

303

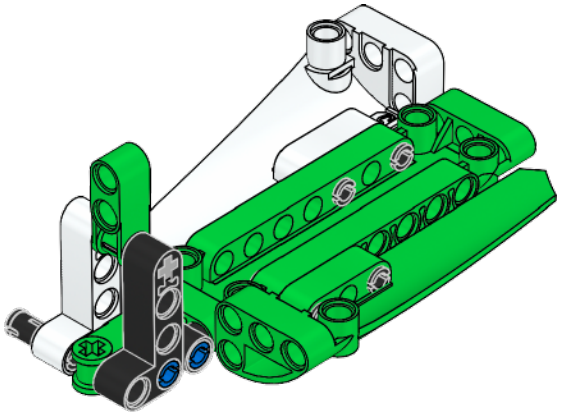

304

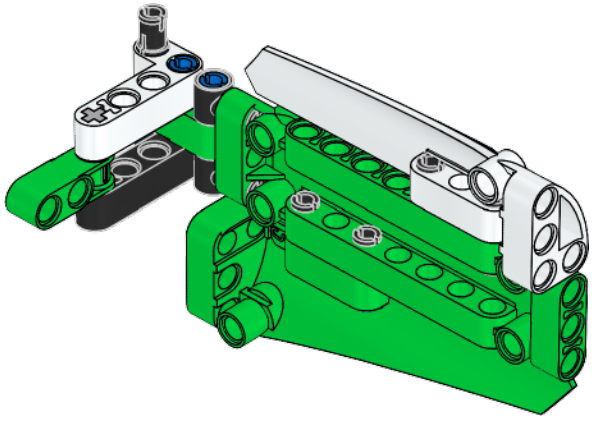

305

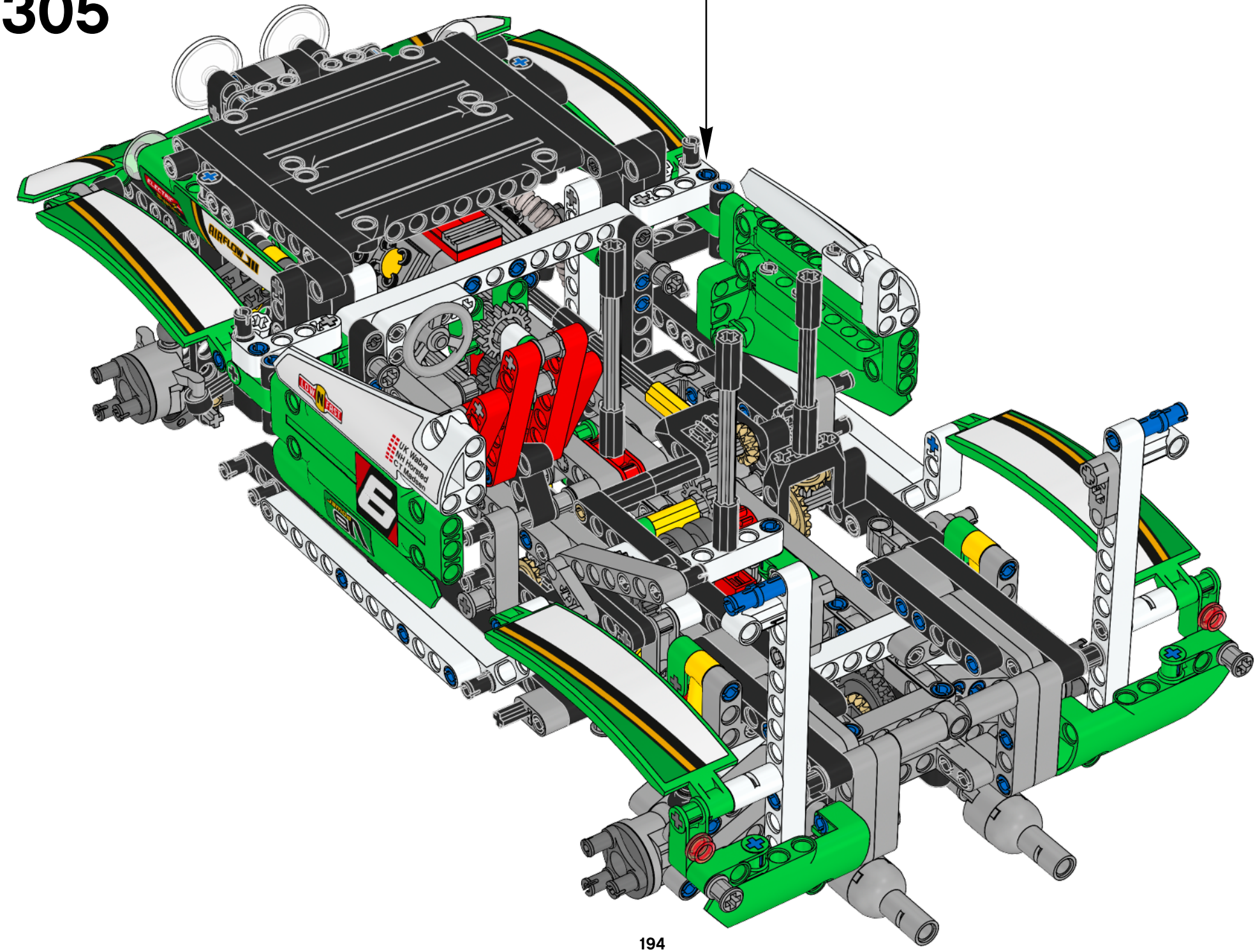

306

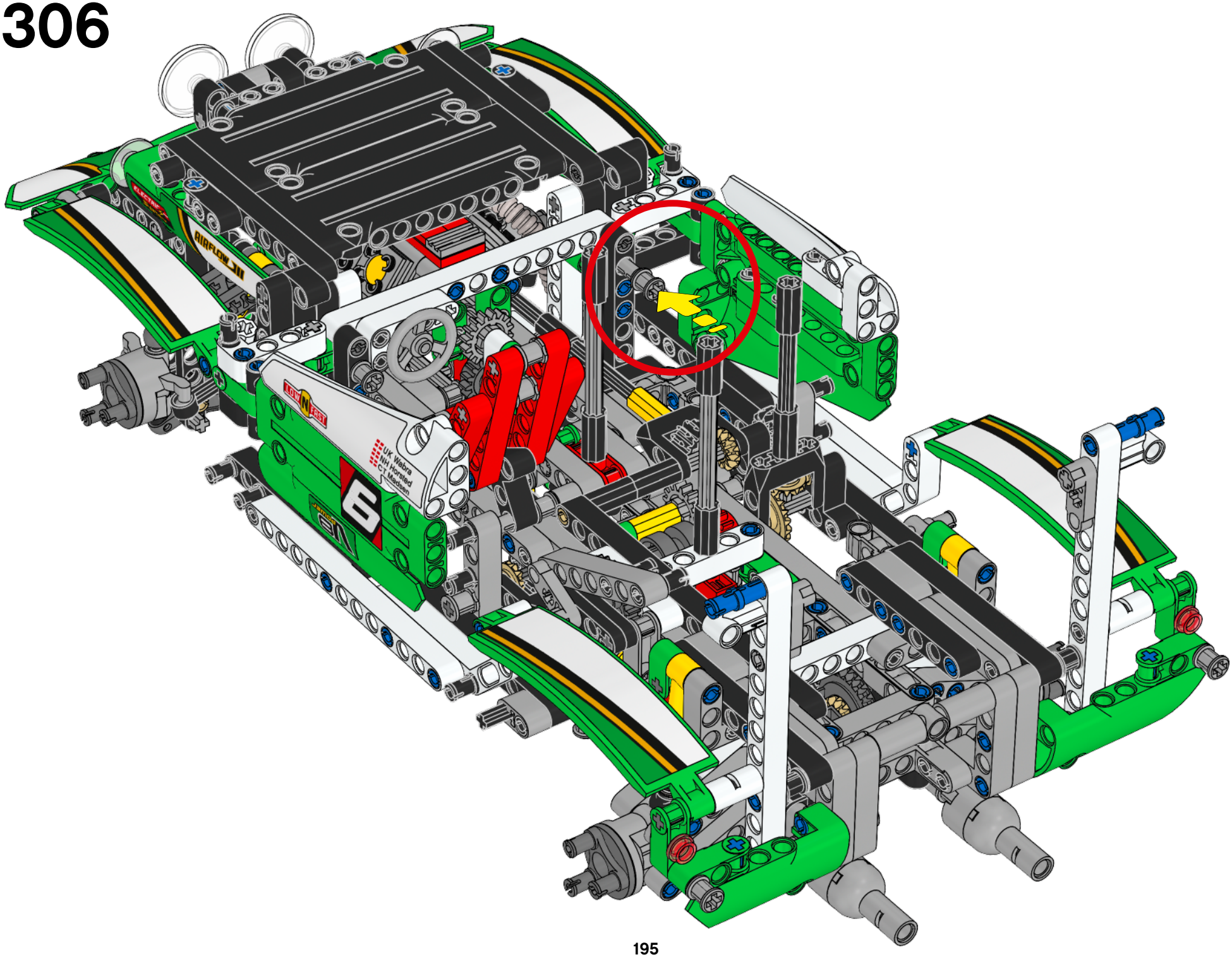

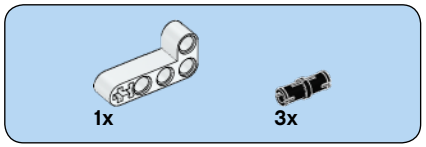
1x
3x

307

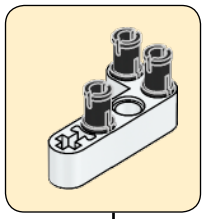

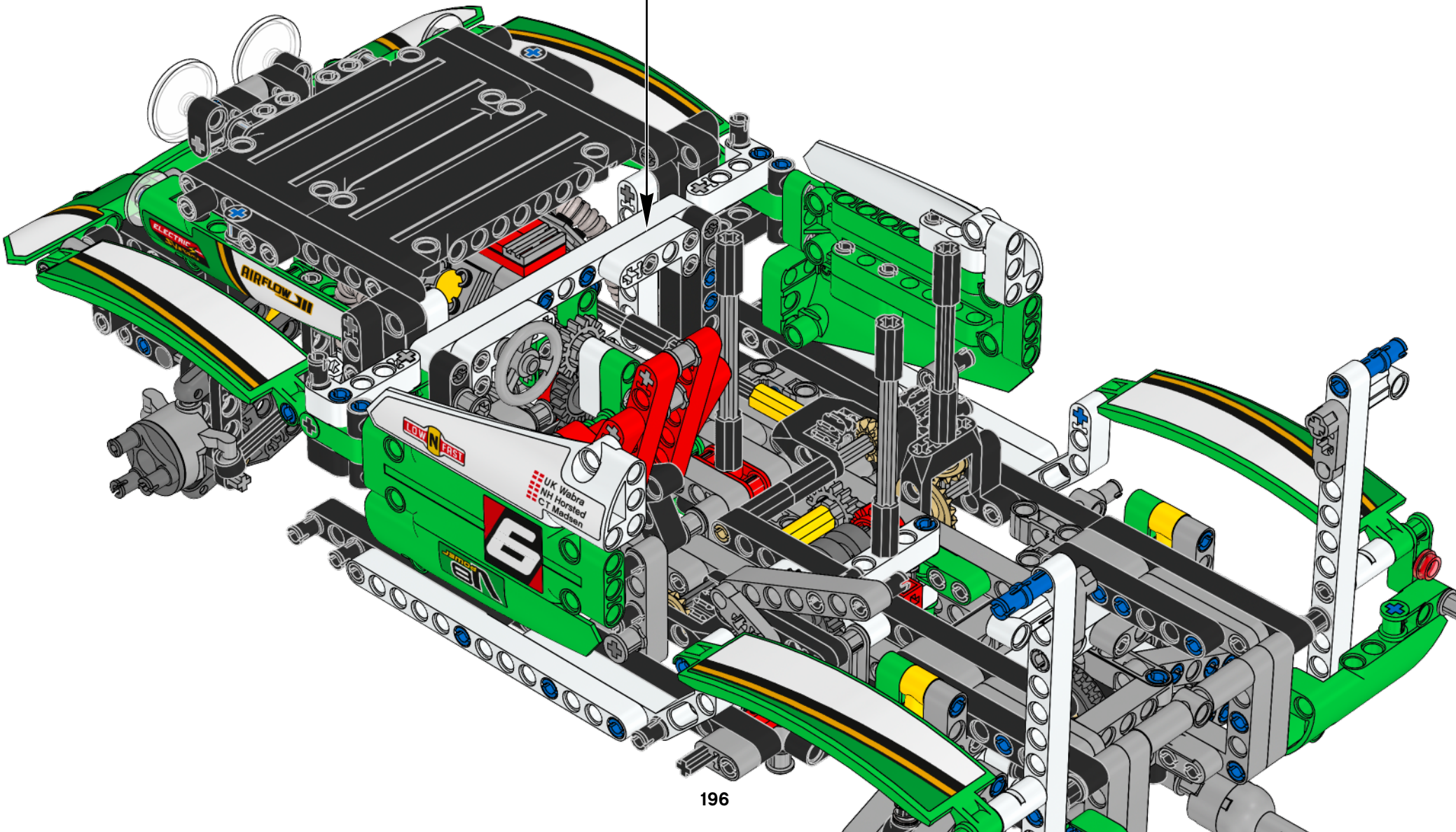
ELECTRIC
AIRFLOW
LOW N FAST
UK Wabra
NH Horsted
CT Madsen
6
V8

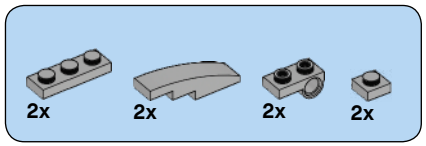
2x
2x
2x
2x

308

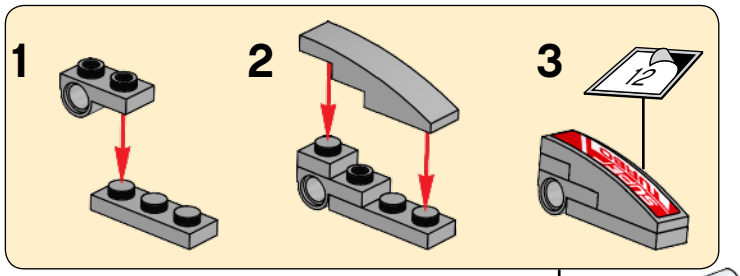
1
2
3
12

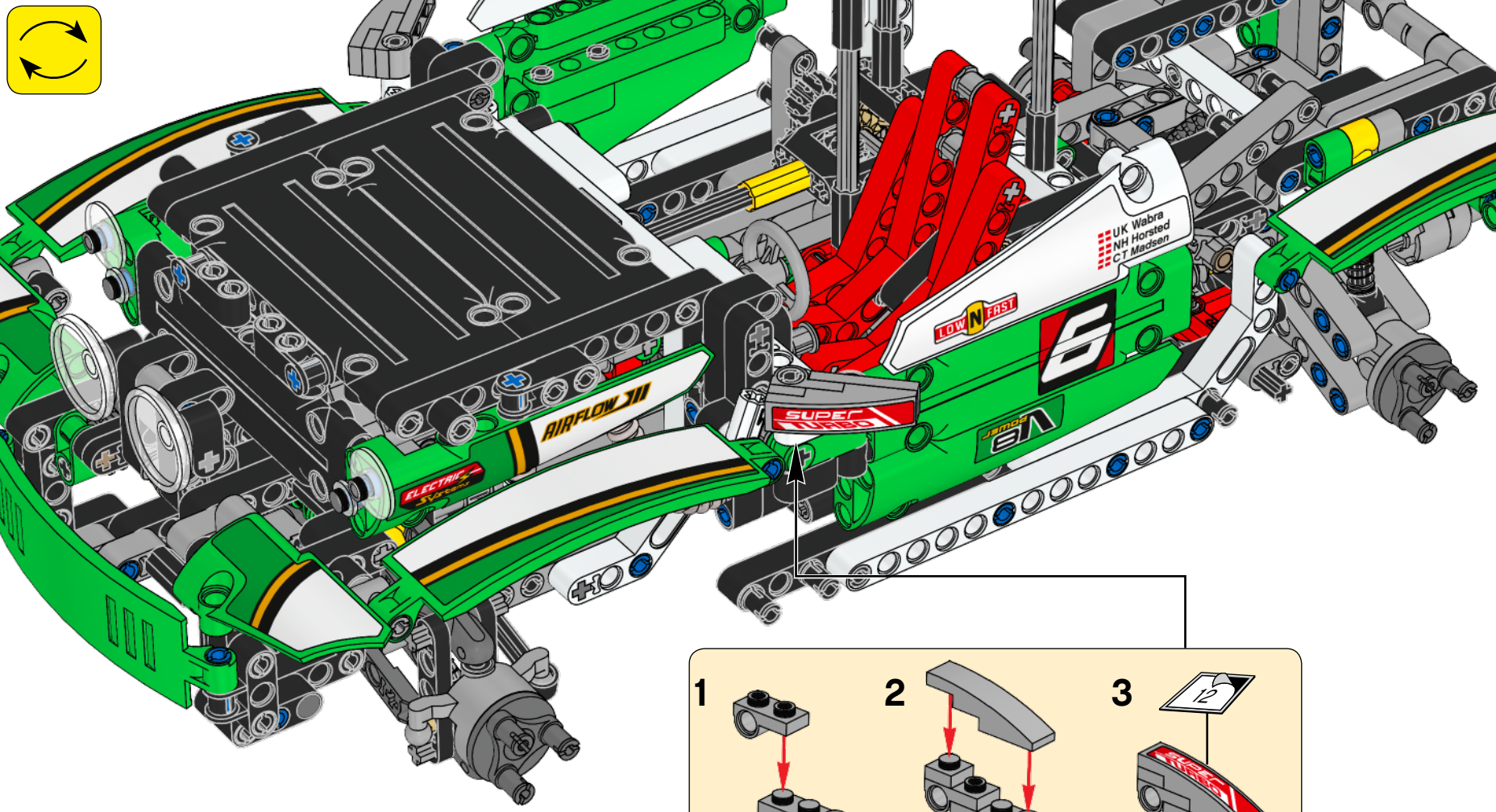
UK Wabra
NH Horsted
CT Madsen
LOW N FAST
6
AIRFLOW III
SUPER TURBO
V8

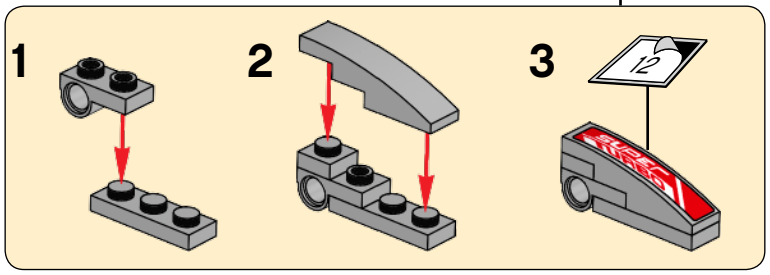
1
2
3
12

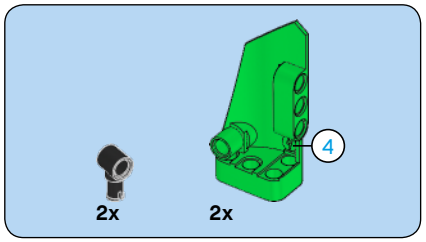

309

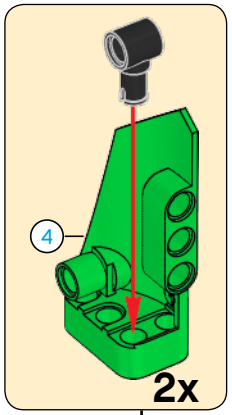

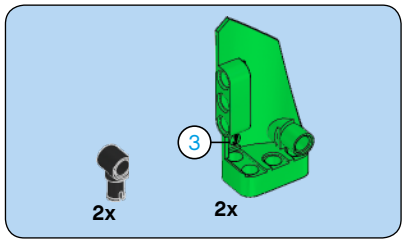
3
2x
2x

310

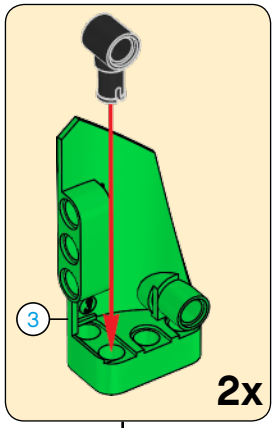
3
2x

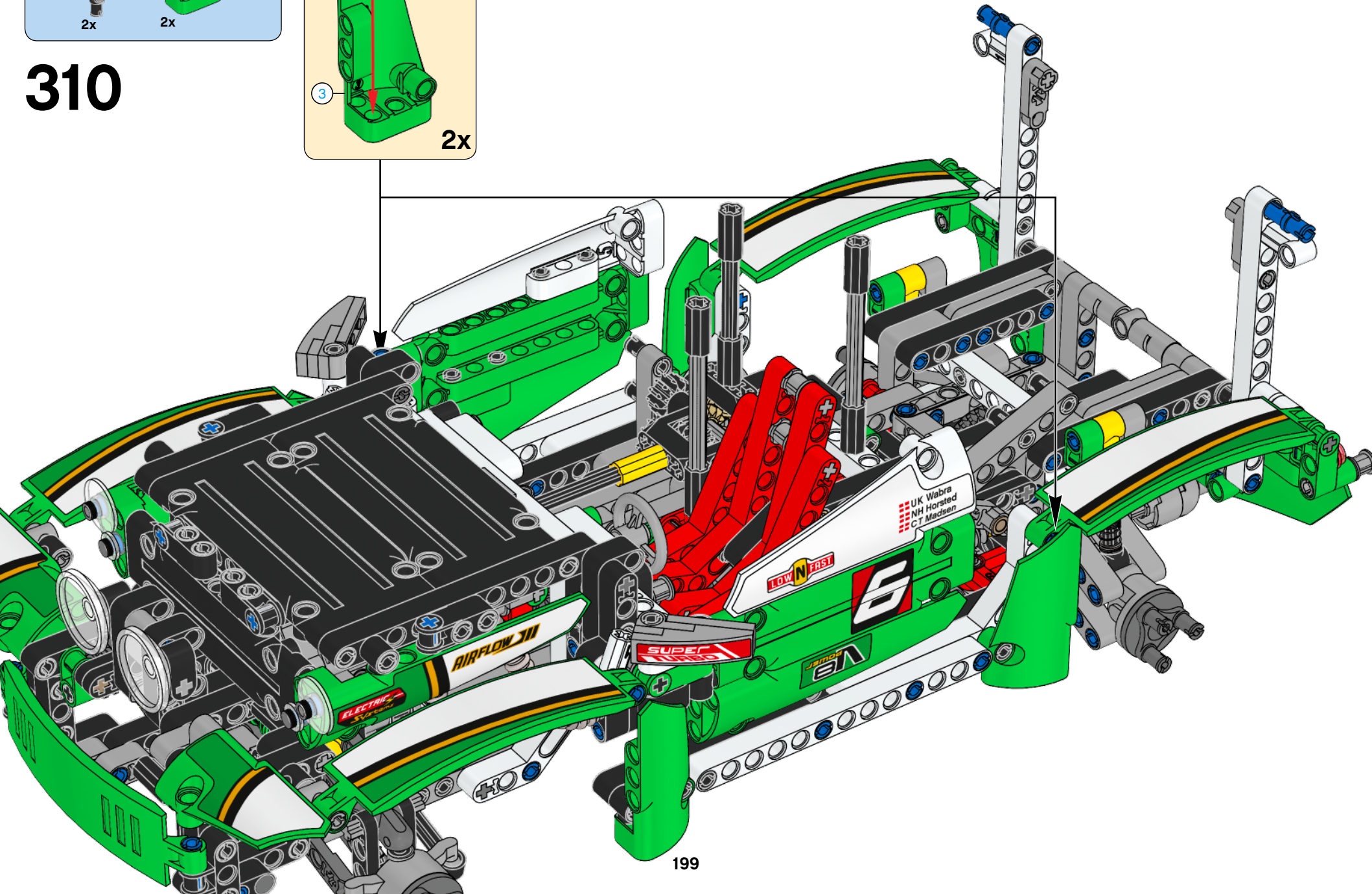
UK Wabra
NH Horsted
CT Madsen
LOW N FAST
AIRFLOW II
SUPER TURBO
ELECTRIC SYSTEM

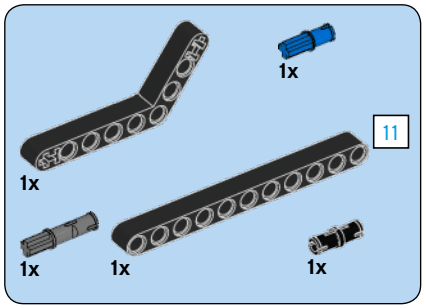

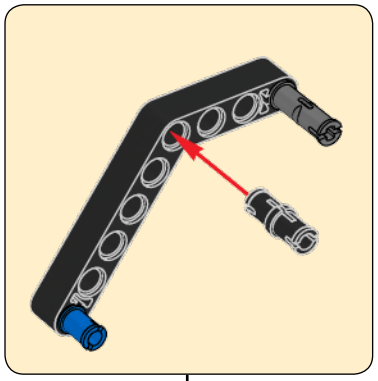

311

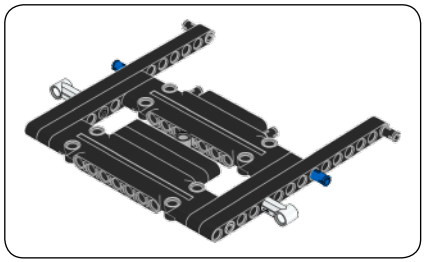

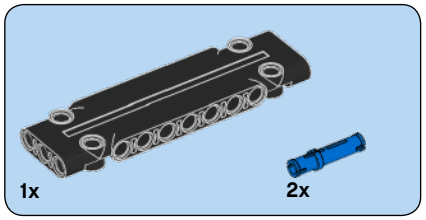

312

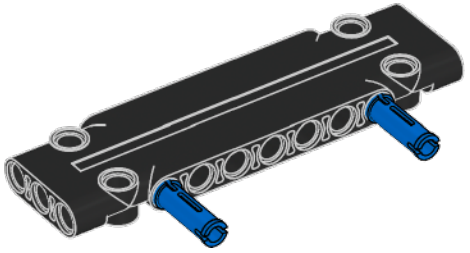

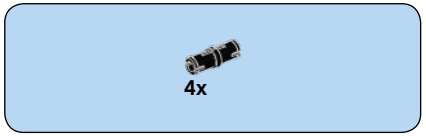

313

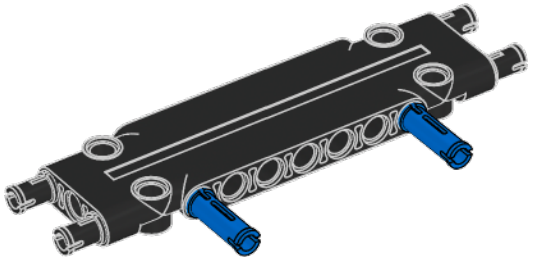

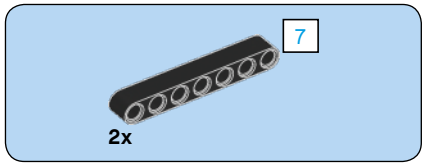

314

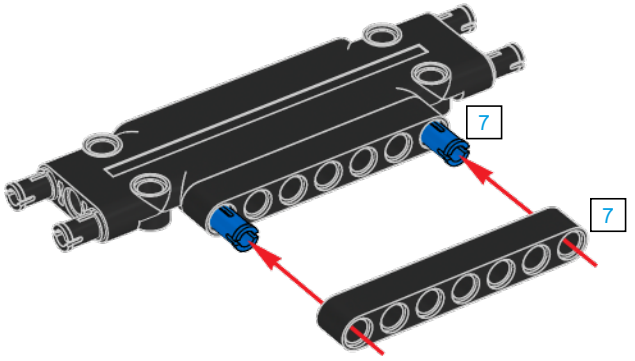

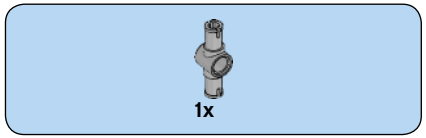

315

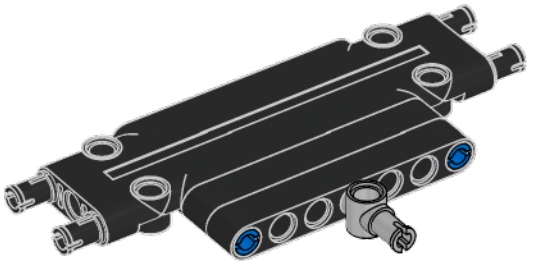

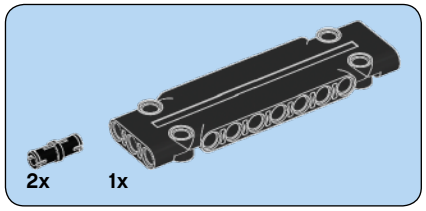

316

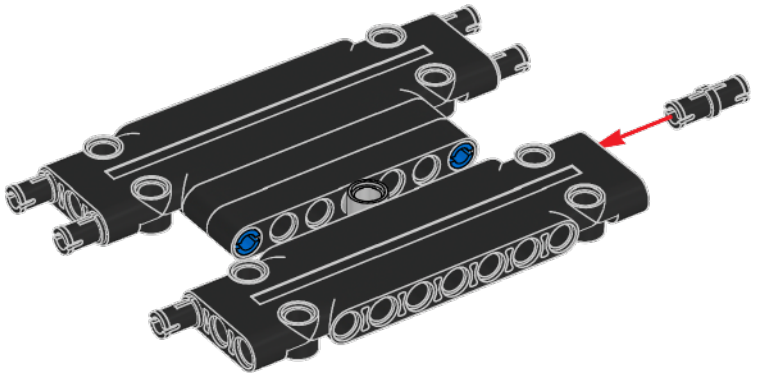

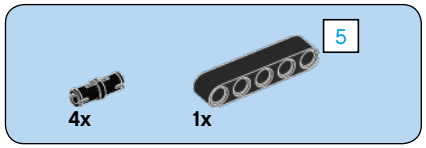

317

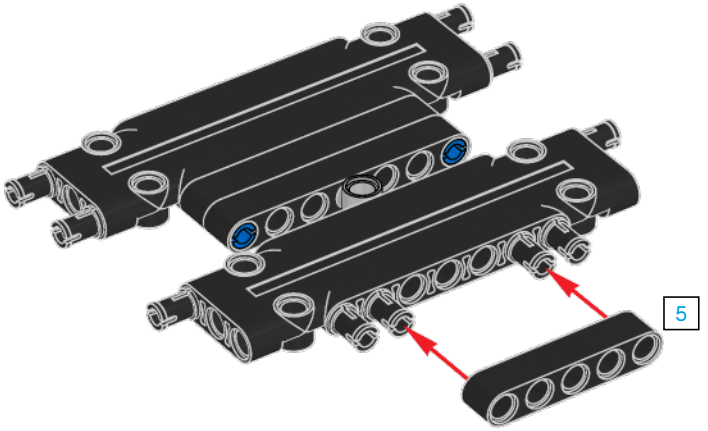

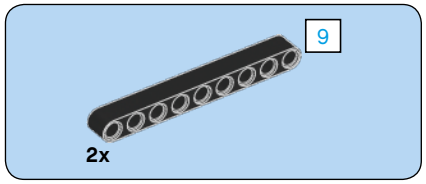

318

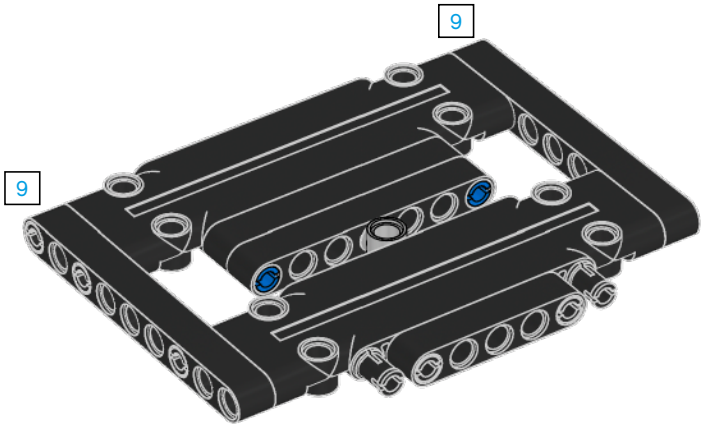

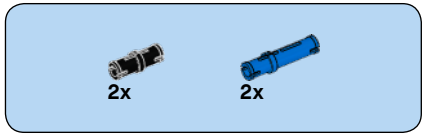

319

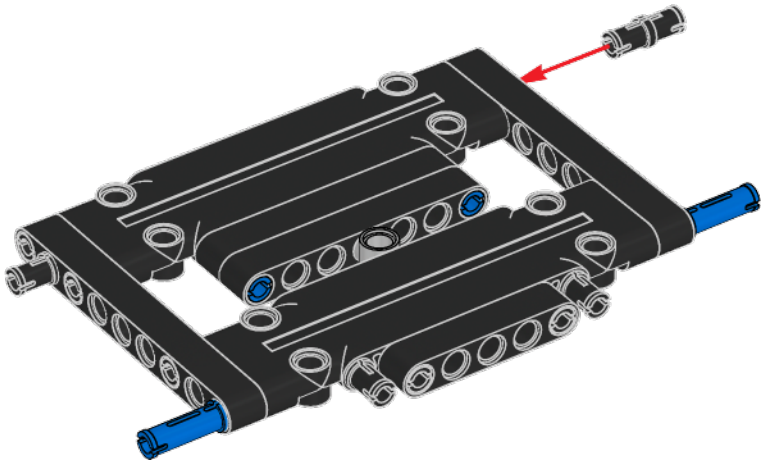

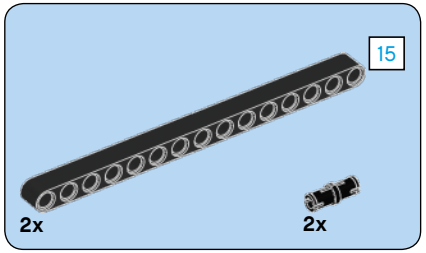

320

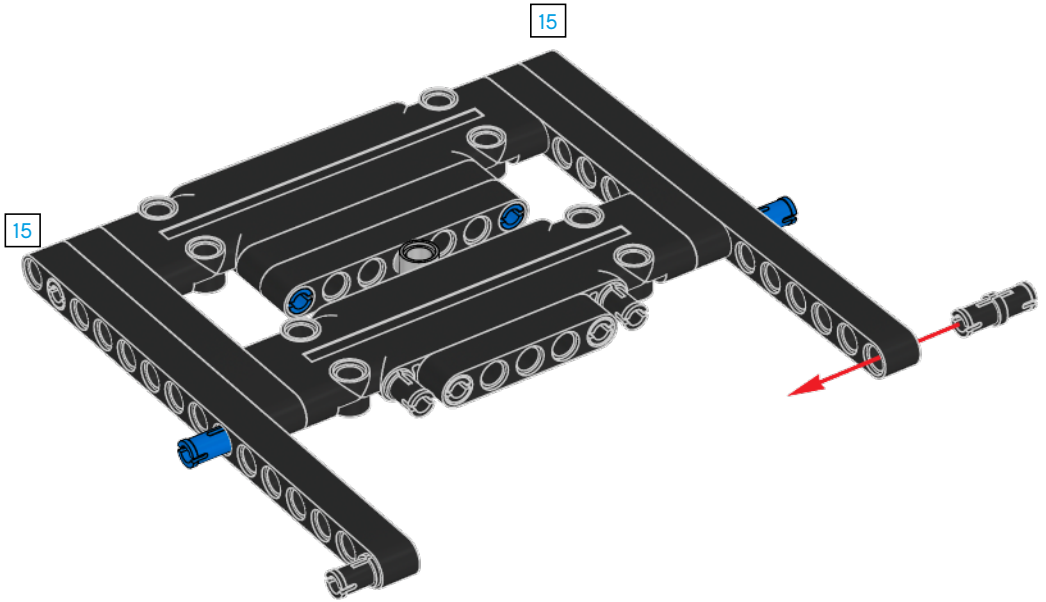

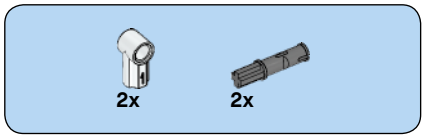

321

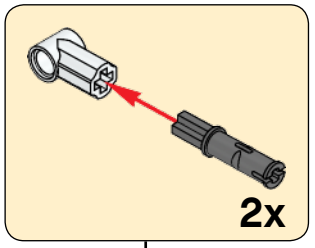

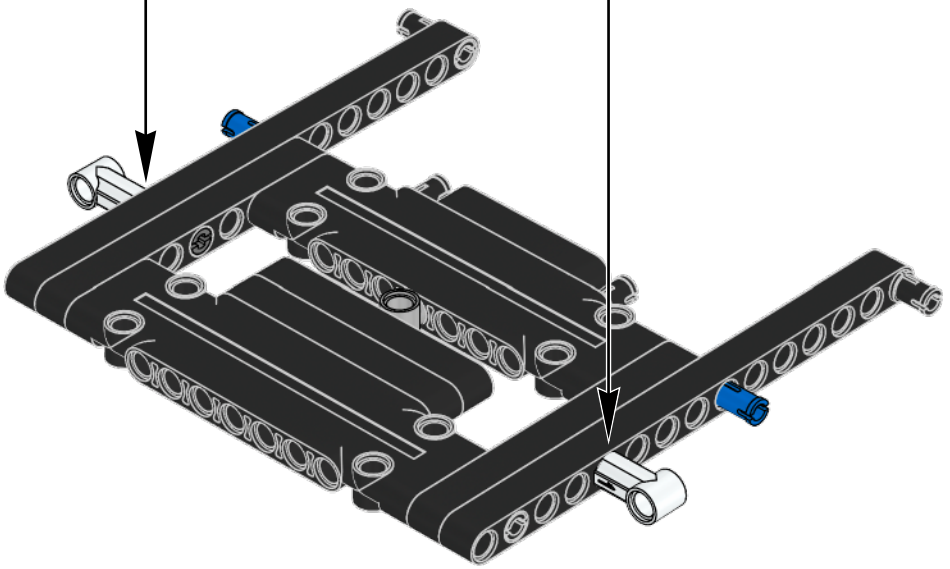

322

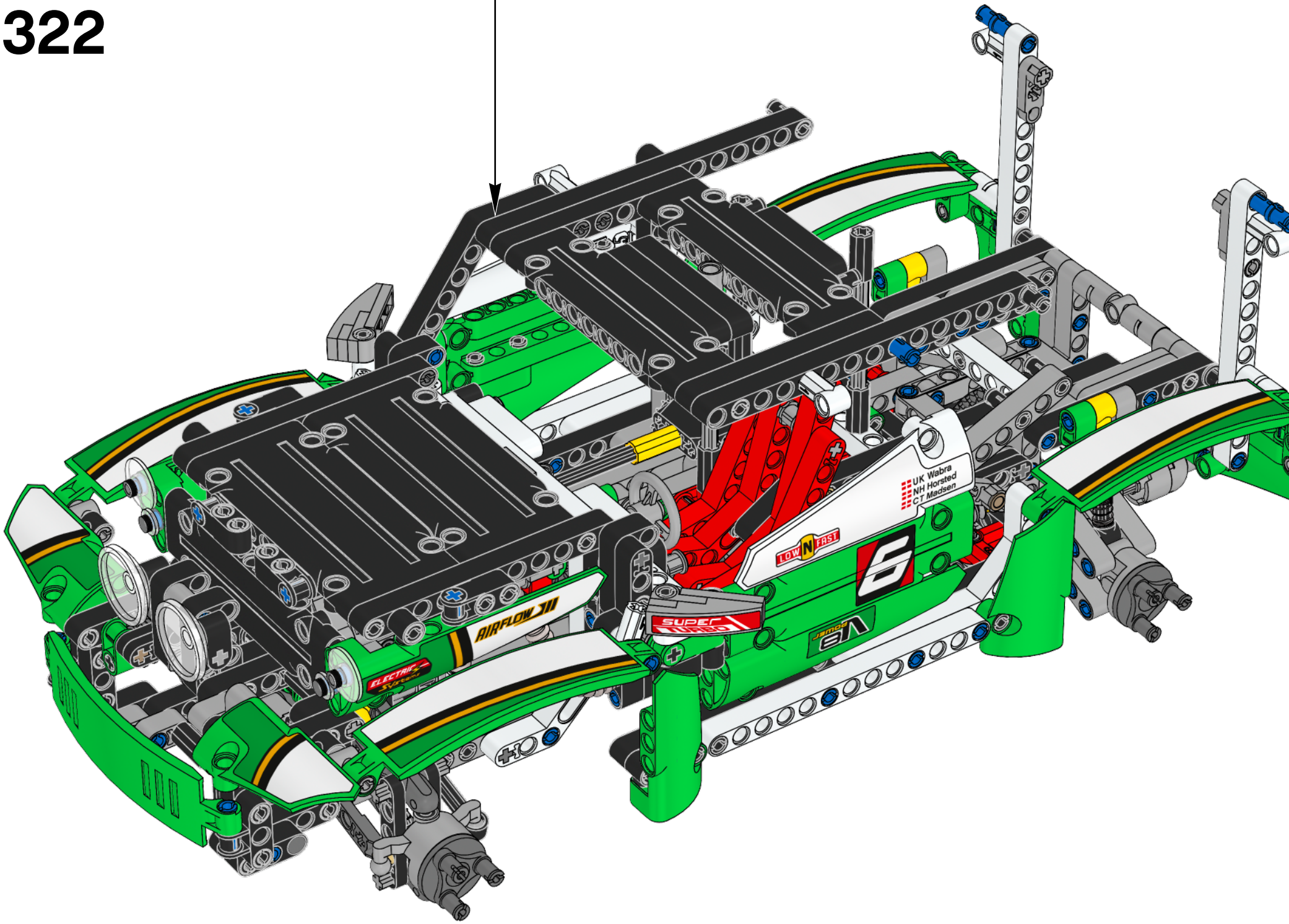
UK Wabra
NH Horsted
CT Madsen
LOW N FAST
AIRFLOW III
SUPER TURBO
V8
ELECTRIC SYSTEM

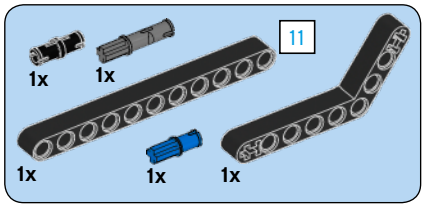

323

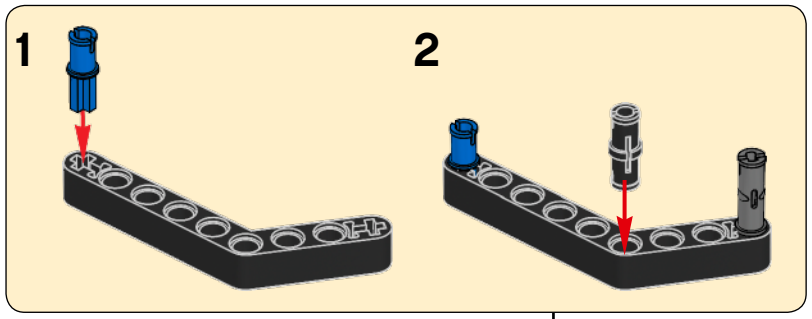

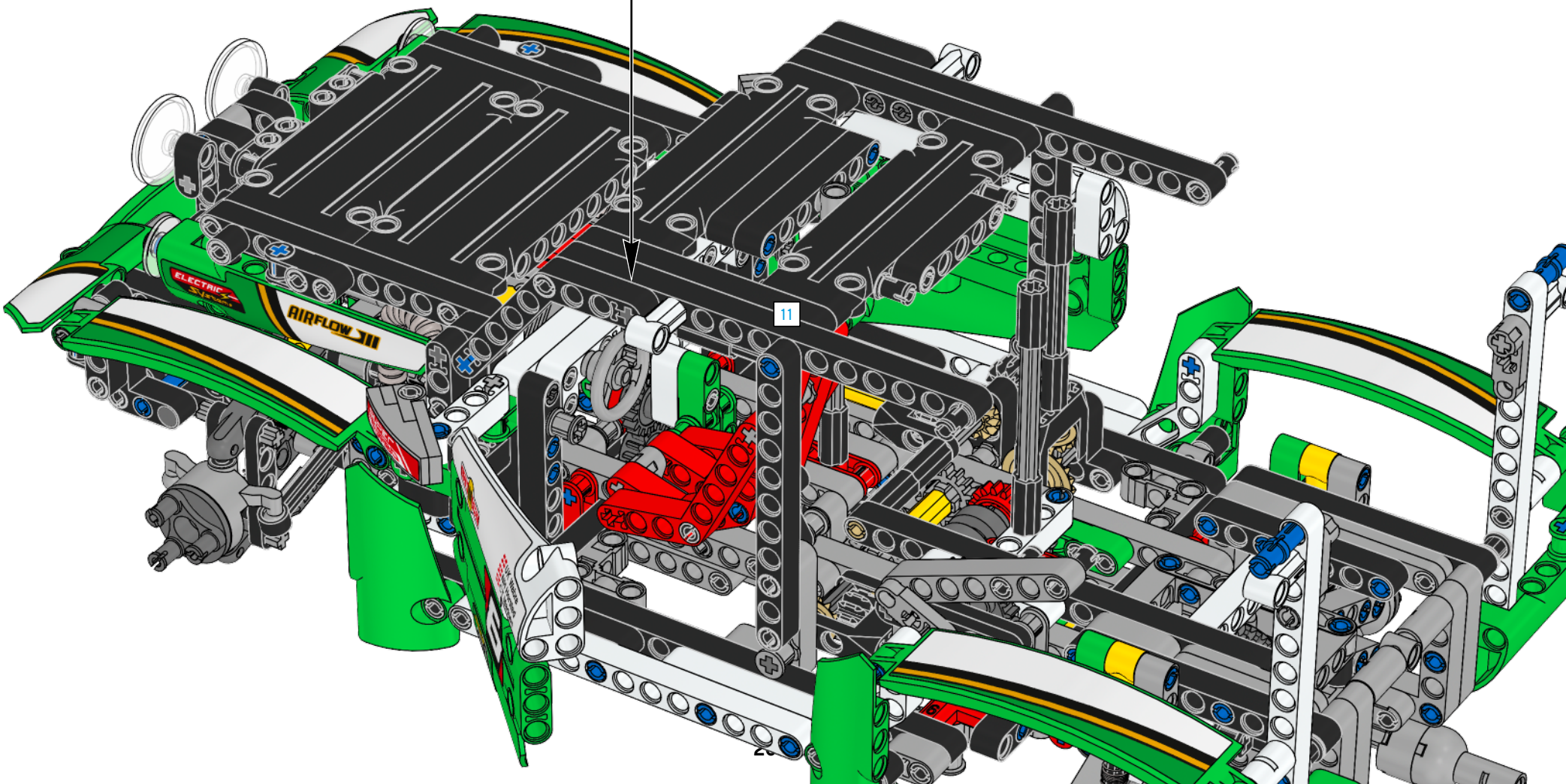

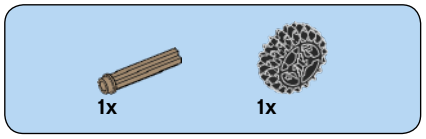
1x
1x

324

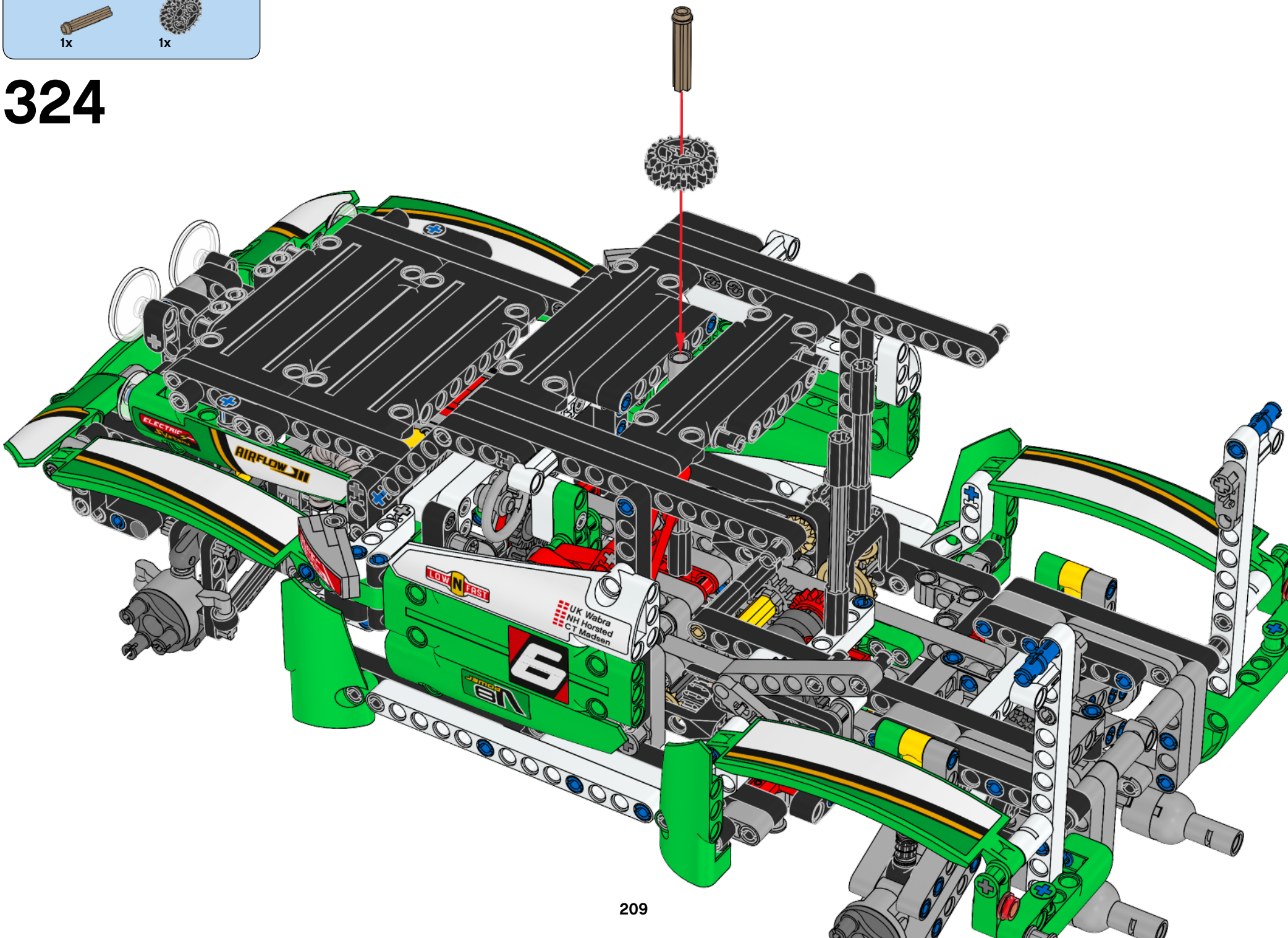
AIRFLOW
LOW N FAST
UK Wabra
NH Horsted
CT Madsen
6
V8 Power

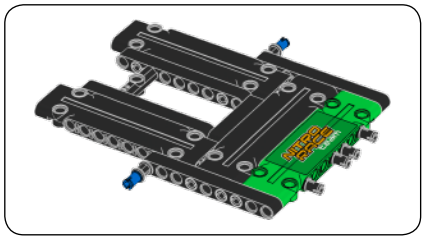

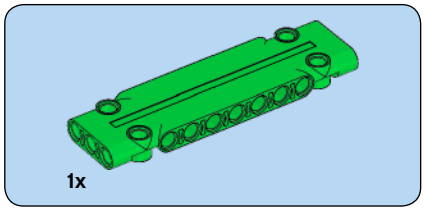

325

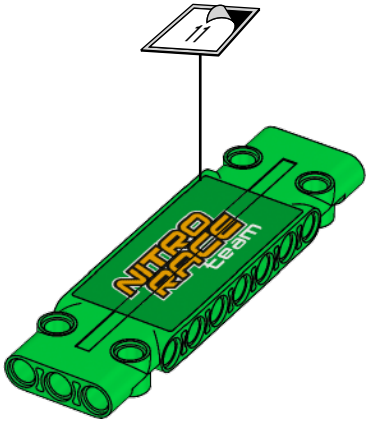

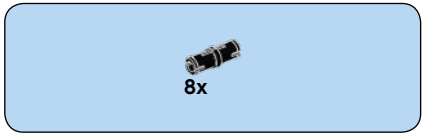

326

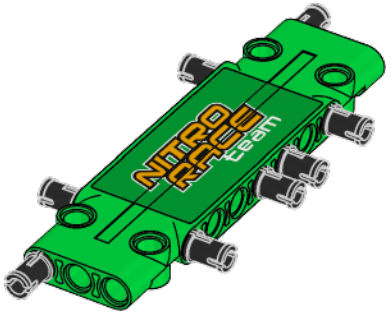

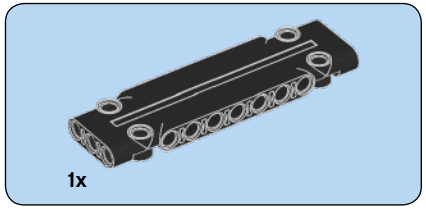

327

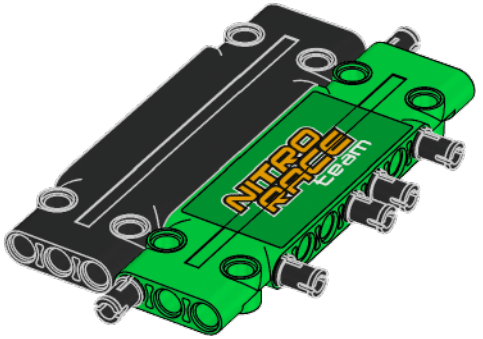

8x

328

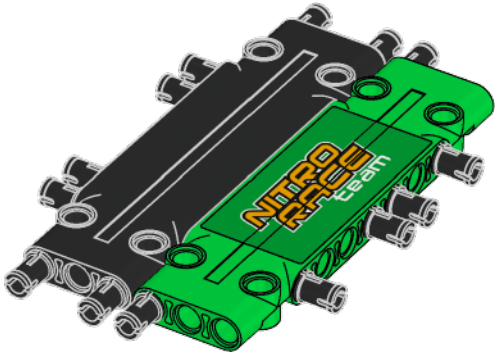

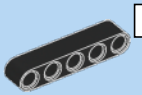
5

1x

329

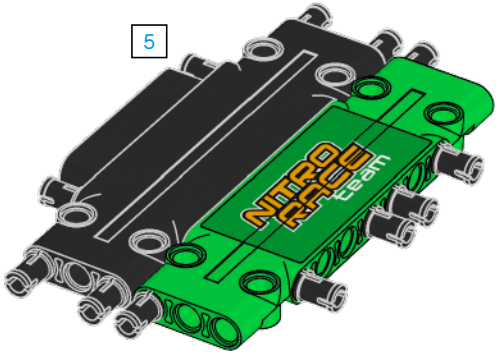

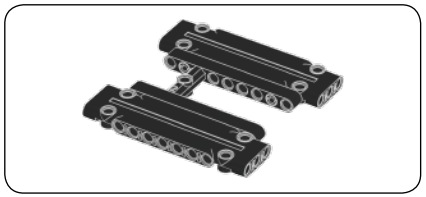

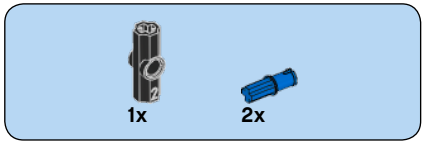

330

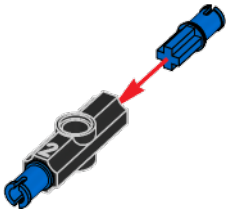

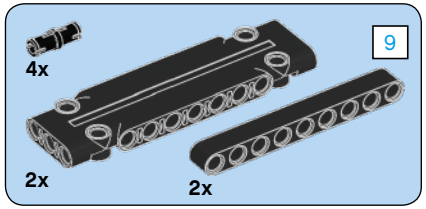

331

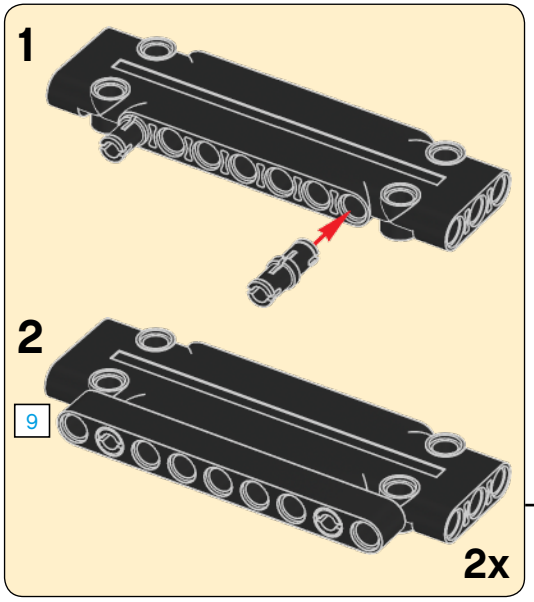

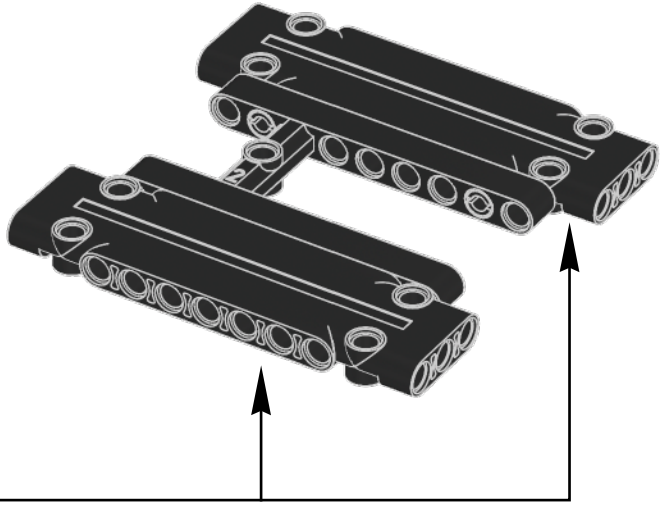

332

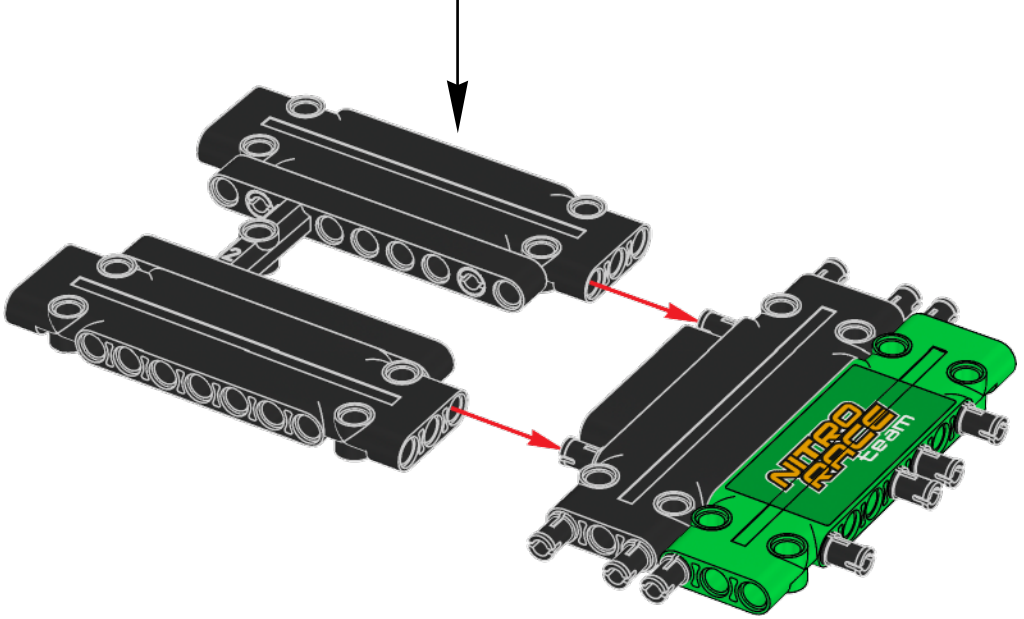

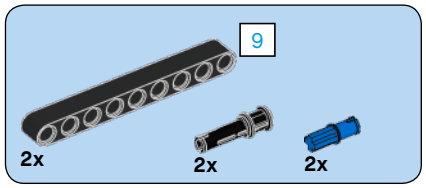

333

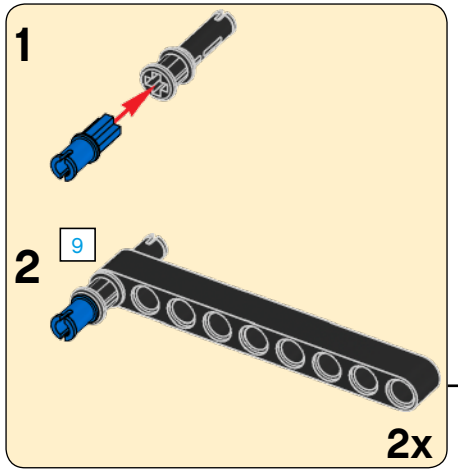

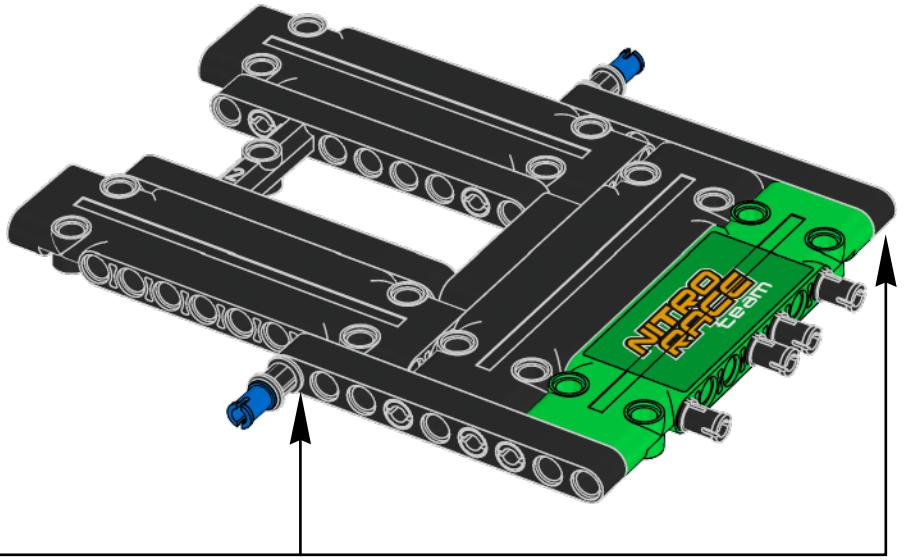

334

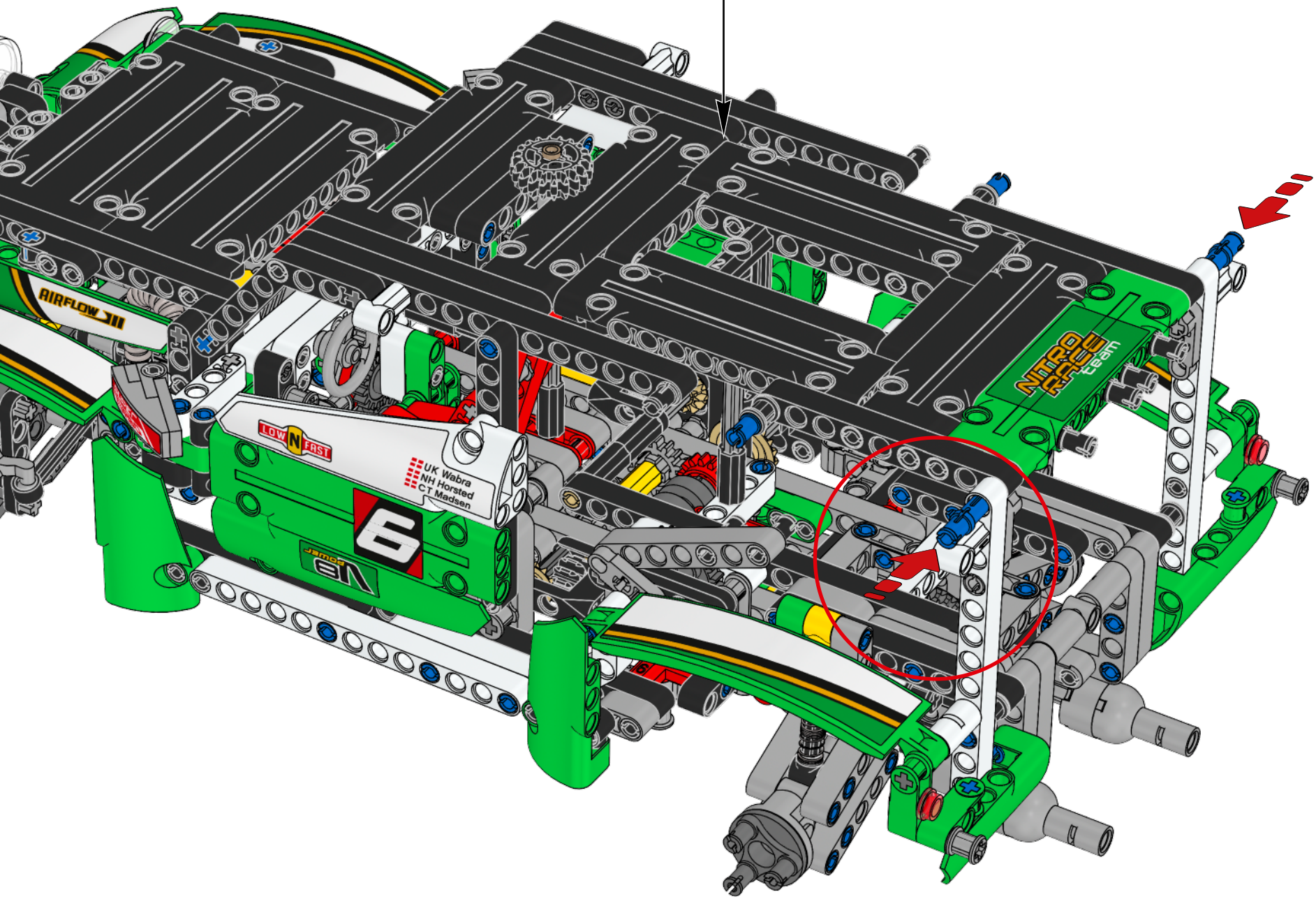
AIRFLOW
LOW N FAST
UK Wabra
NH Horsted
CT Madsen
6
V8
NITRO RACE TEAM

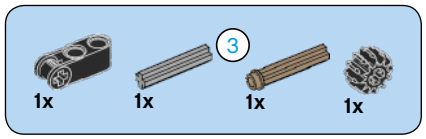
3
1x
1x
1x
1x

335

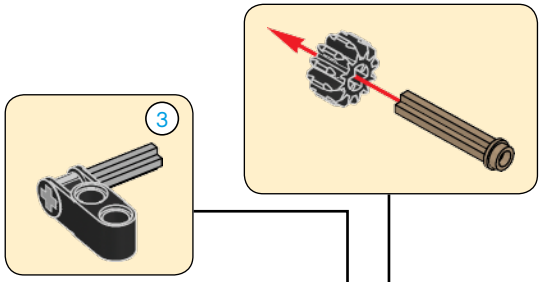
3

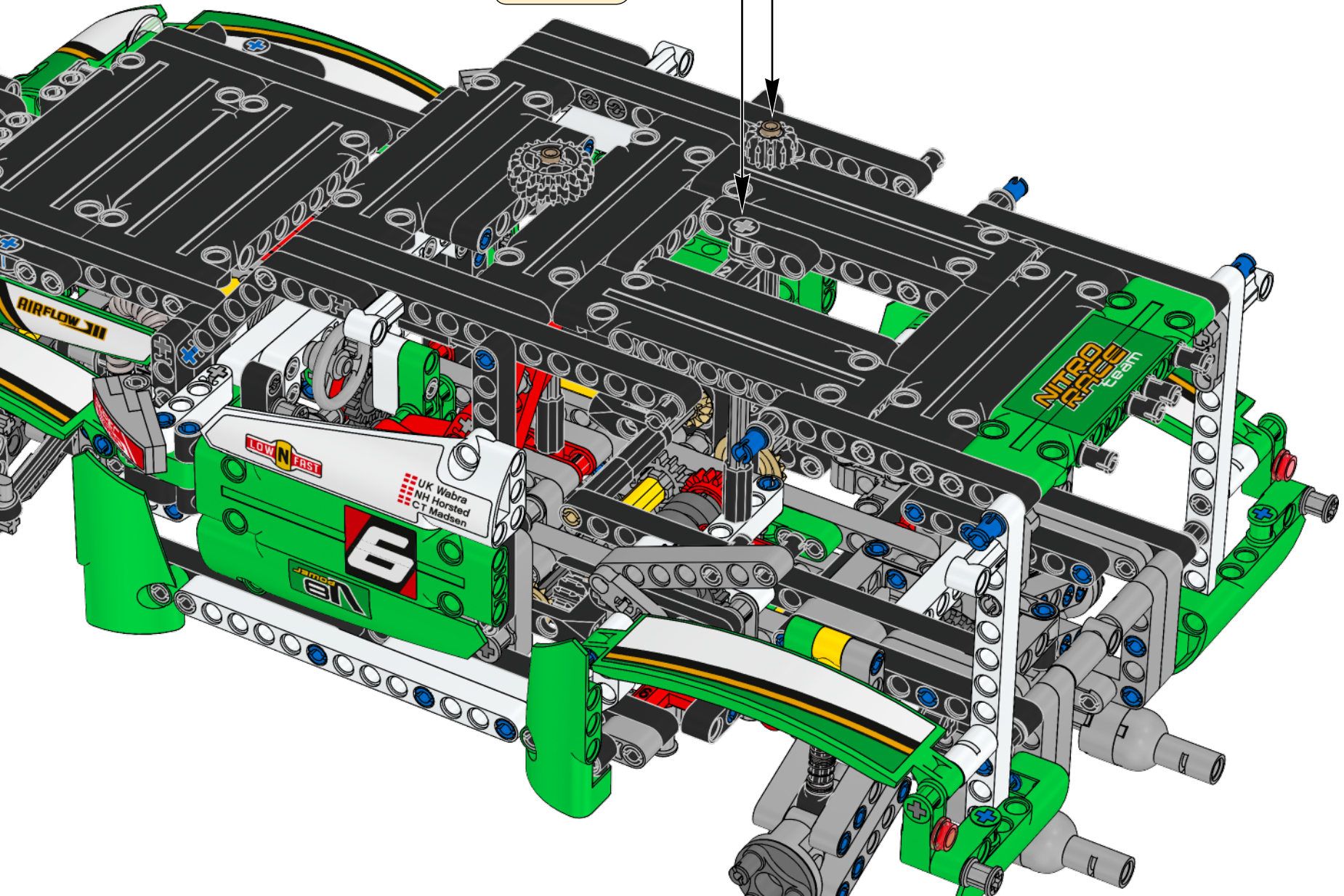
AIRFLOW
LOW N FIRST
UK Wabra
NH Horsted
CT Madsen
6
V8 POWER
NITRO RACING Team

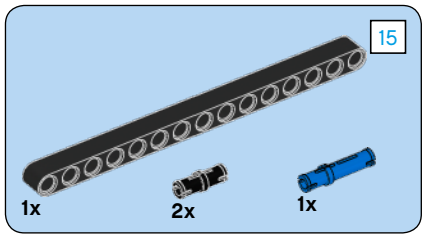
15
1x
2x
1x

336

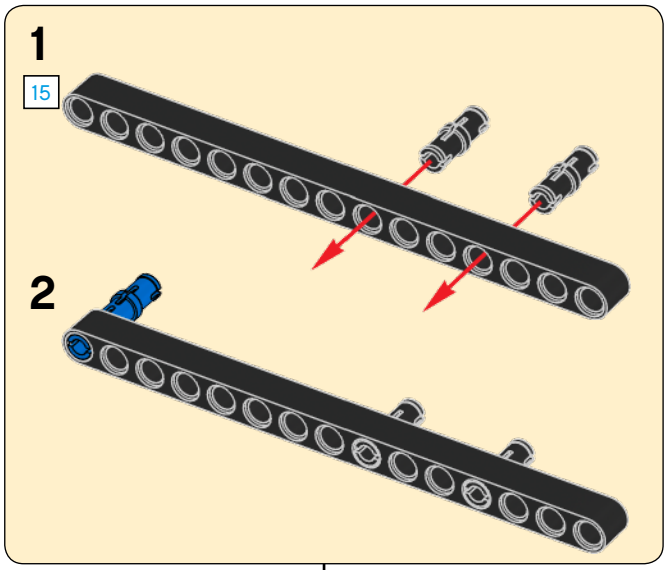
1
15
2

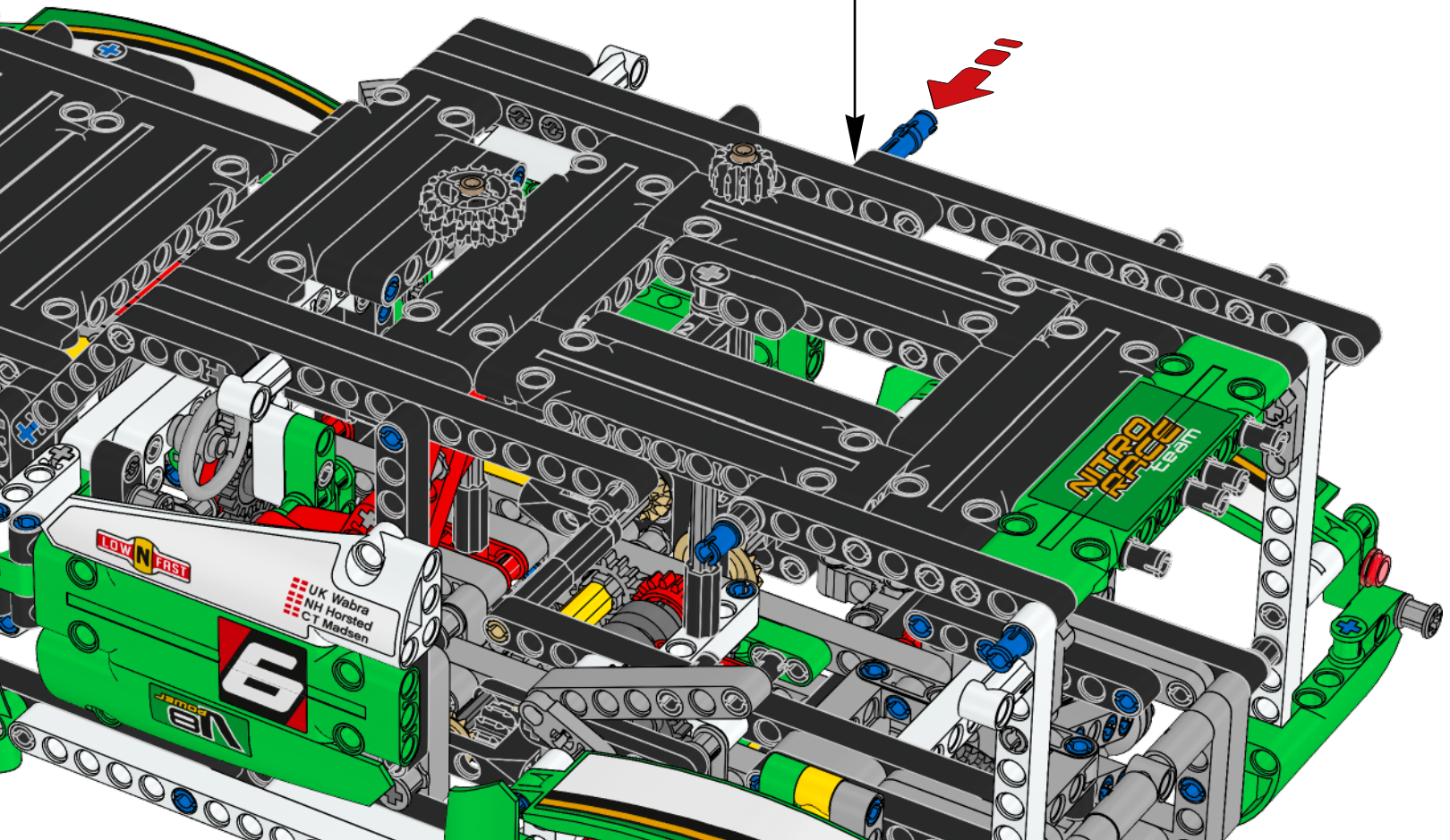
LOW N FAST
UK Wabra
NH Horsted
CT Madsen
6
NITRO RACE
Team

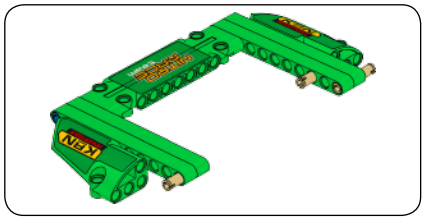

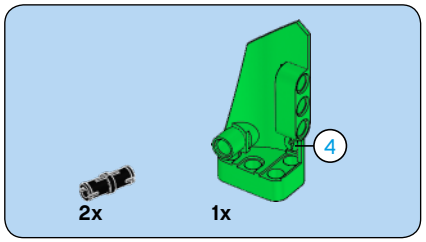

337

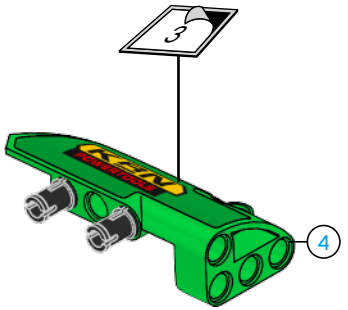

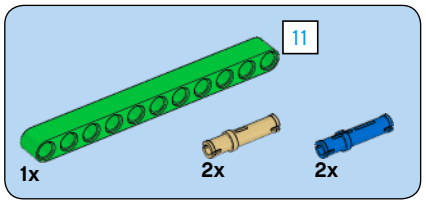

338

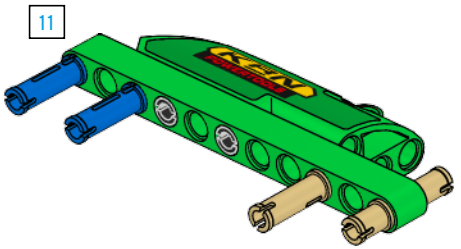

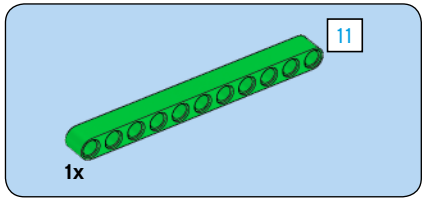

339

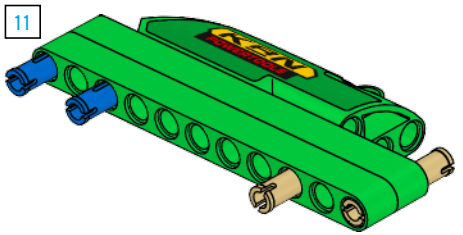

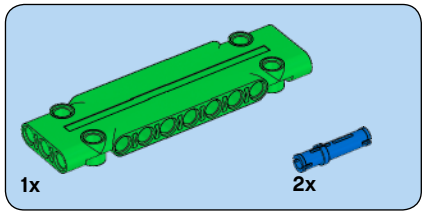

340

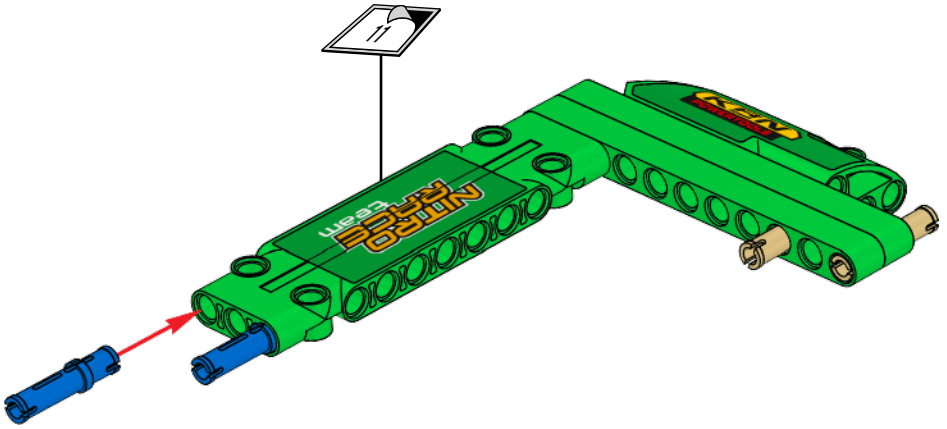

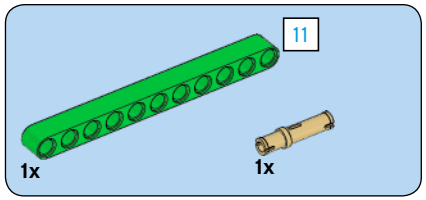

341

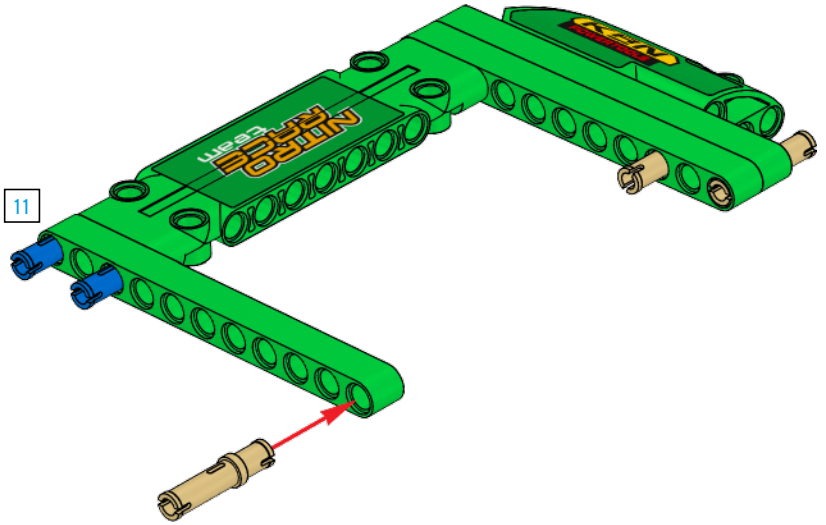

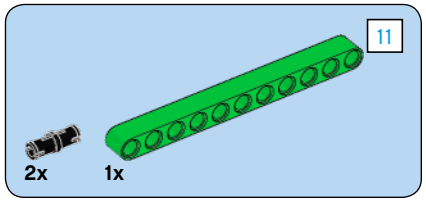

342

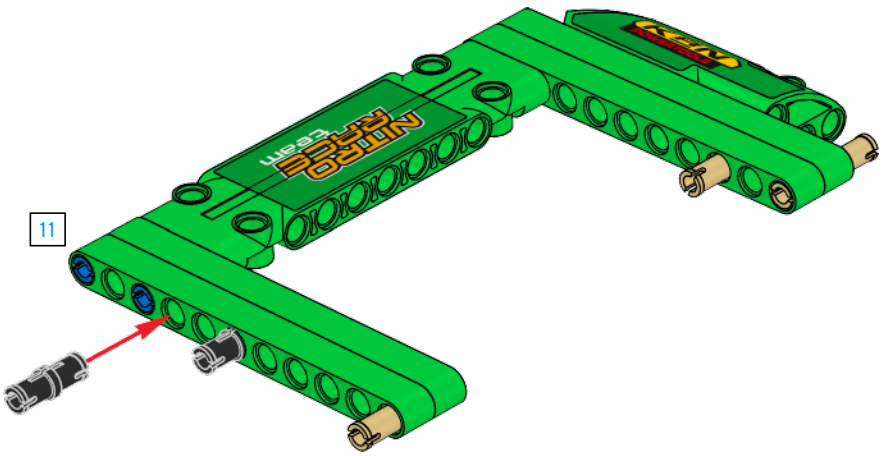

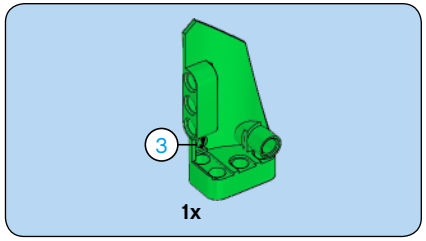

343

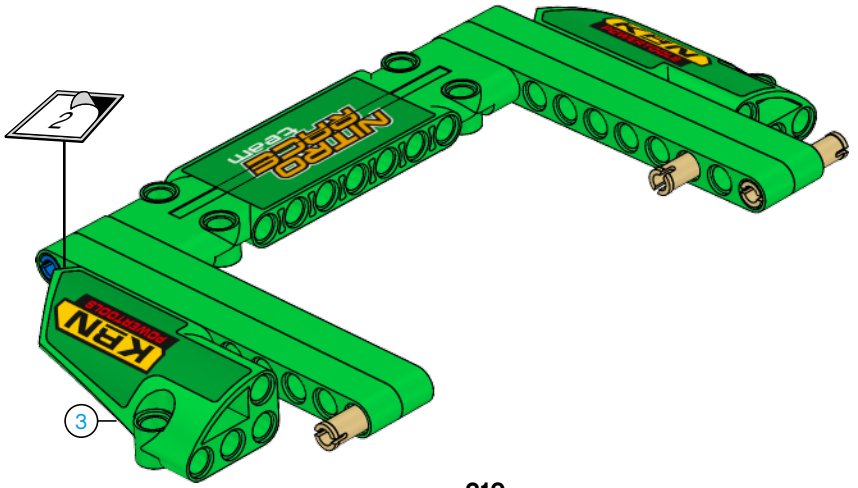

344

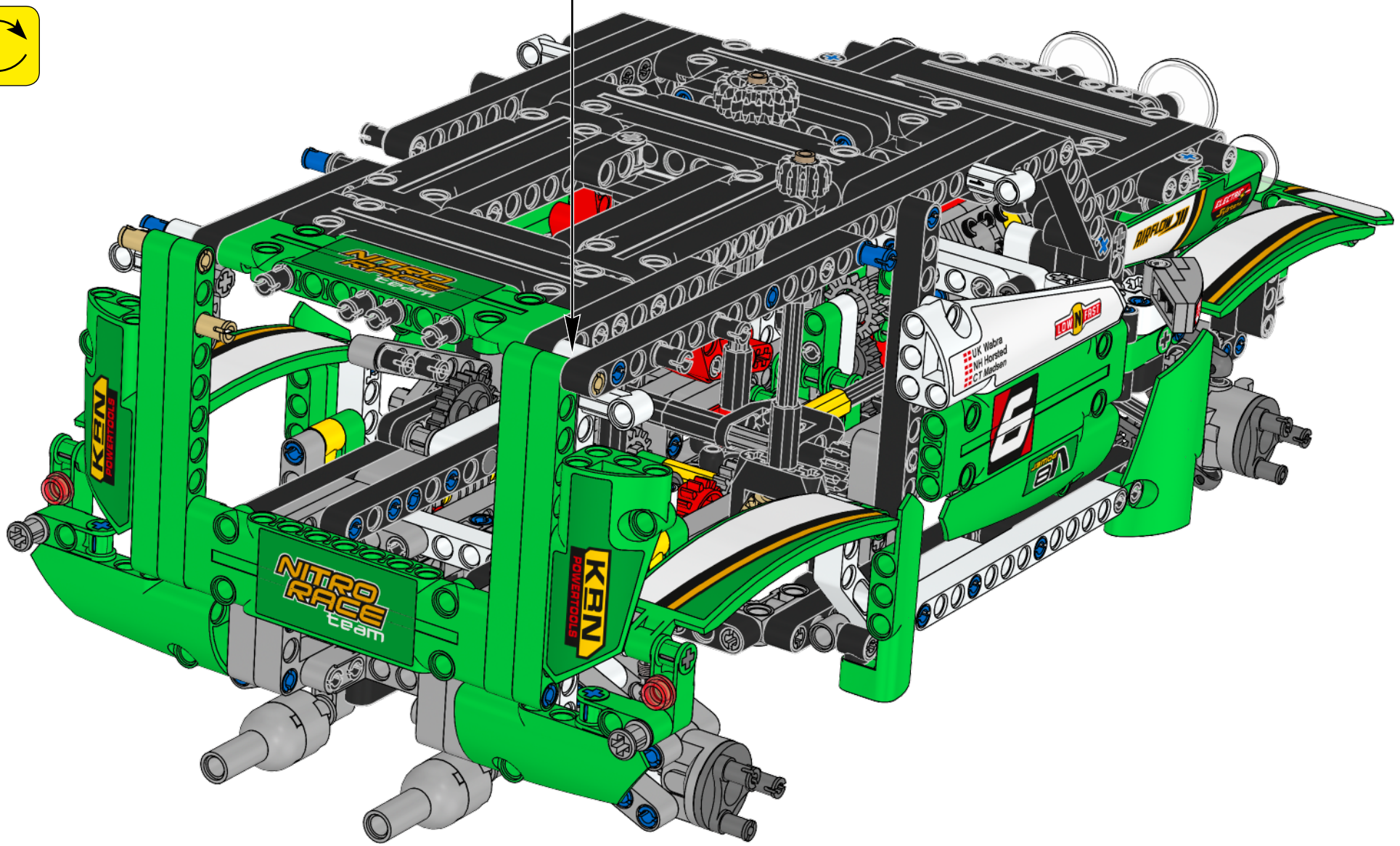
NITRO RACE team
KAN POWERTOOLS
UK Wabra
NH Horsted
CT Madsen
LOW N FAST
AIRFLOW 3D

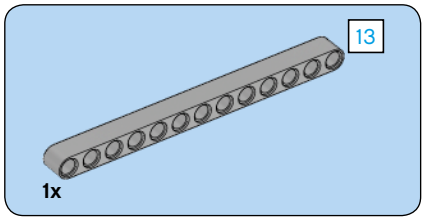

345

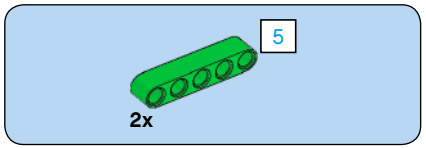
5
2x

346

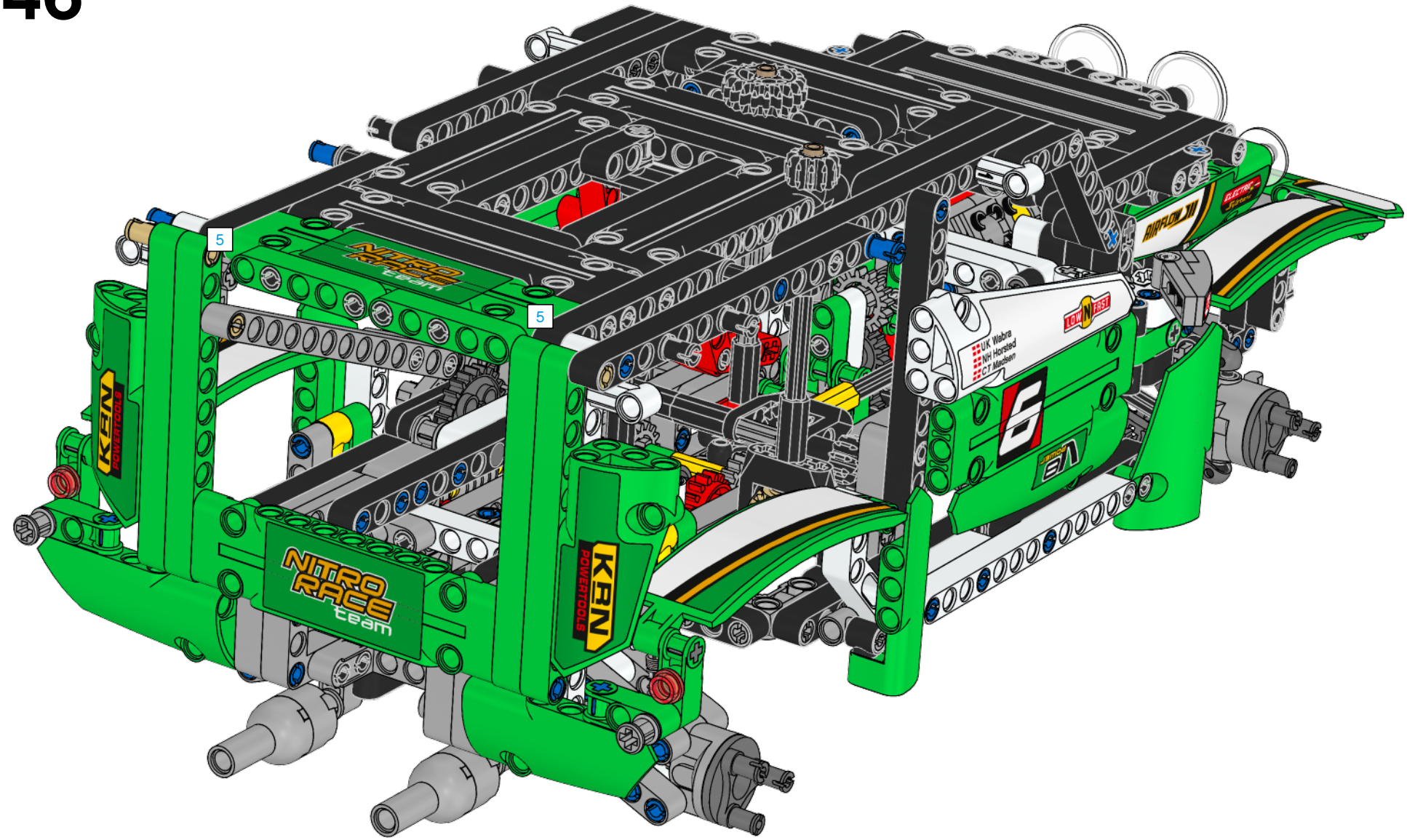
5
5
NITRO RACE team
KRN POWERTOOLS
NITRO RACE team
KRN POWERTOOLS
AIRFLOW XII
LAW FIRST
UK Wabra
NH Horsted
CT Madsen
V8

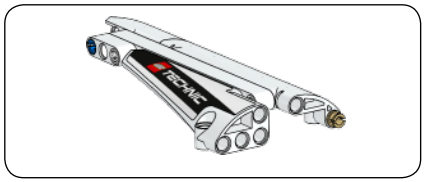

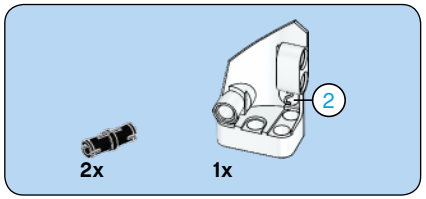

347

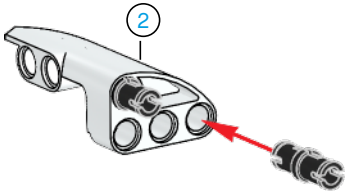

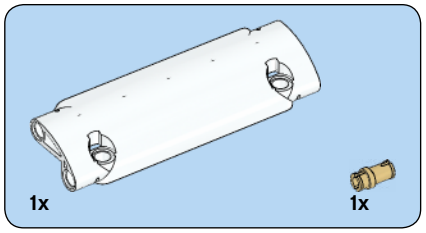

348

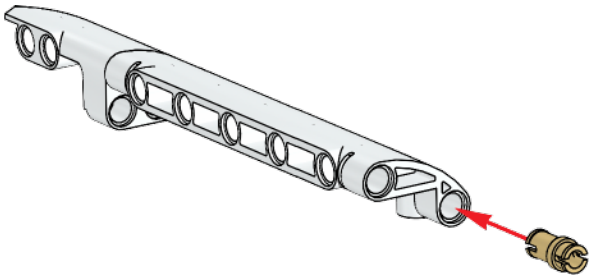

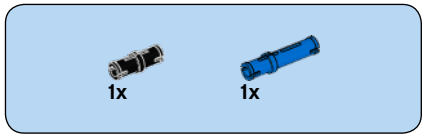

349

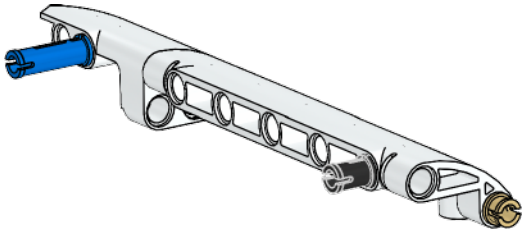

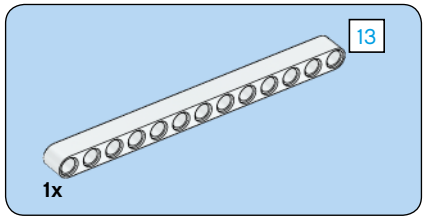

350

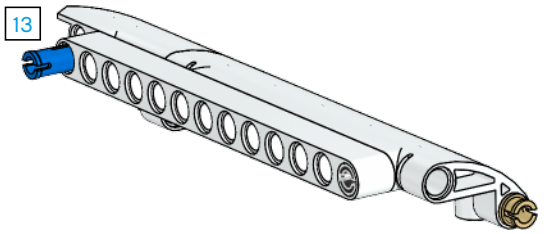

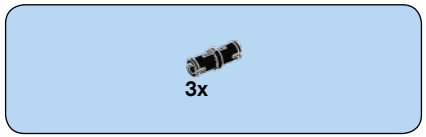

351

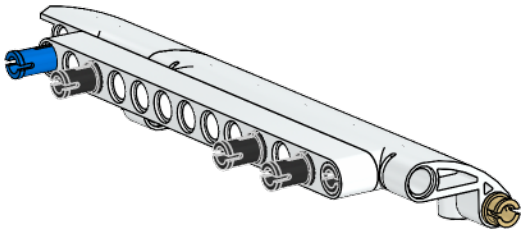

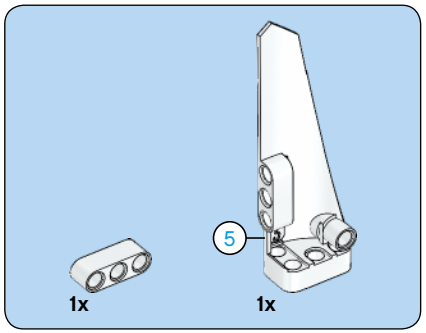

352

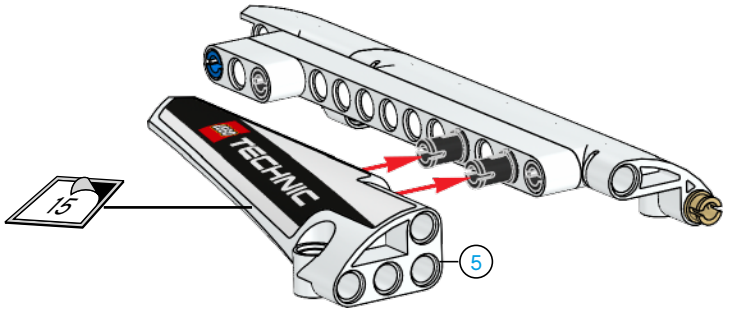

353

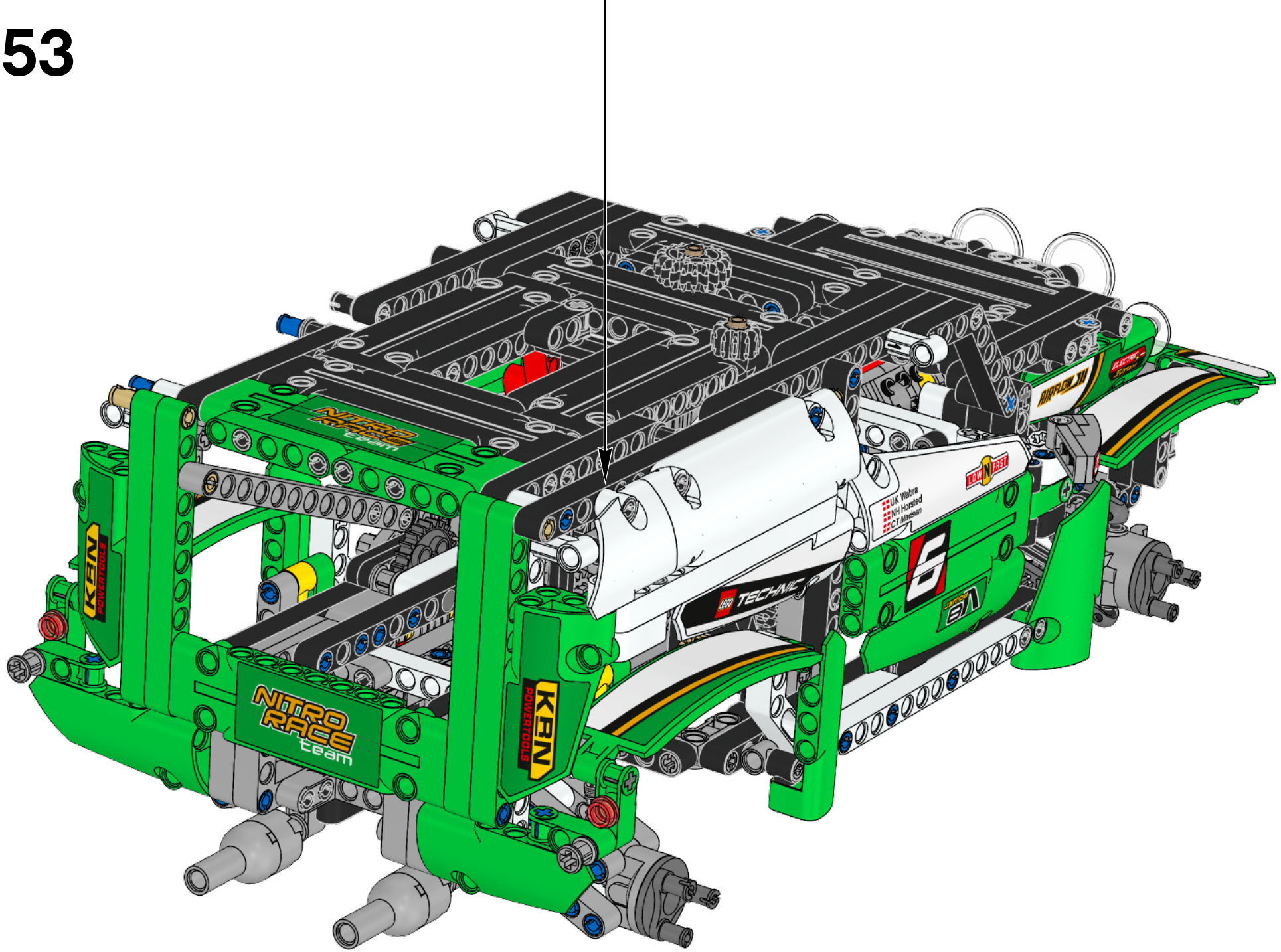
NITRO RACE team
KEN POWERTOOLS
TECHNIC
UK Wabra
NH Horsted
CT Madsen

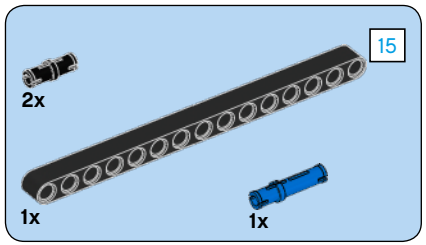
15
2x
1x
1x

354

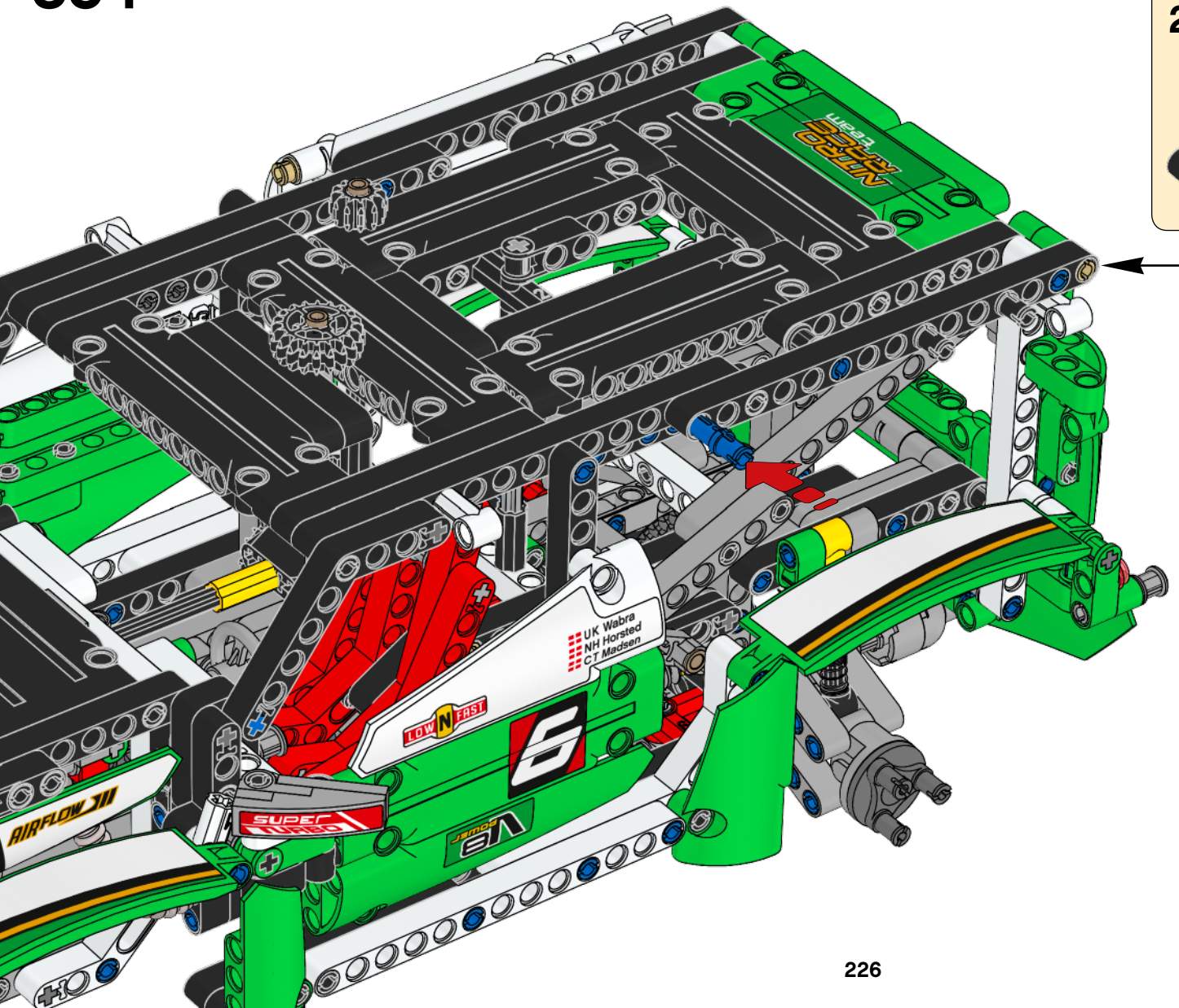
UK Wabra
NH Horsted
CT Madsen
LOW N FAST
AIRFLOW
SUPER TURBO
Jsmoe

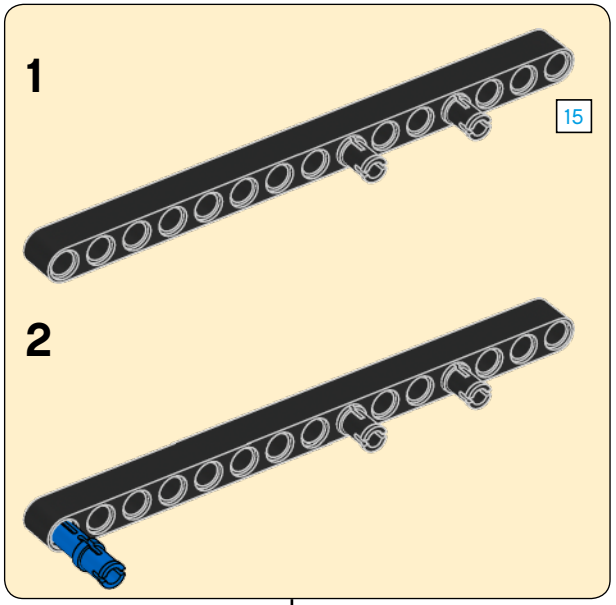
1
15
2

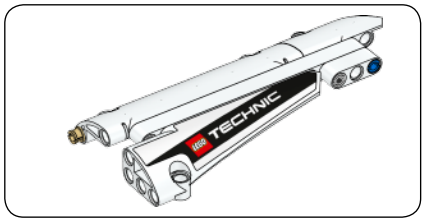

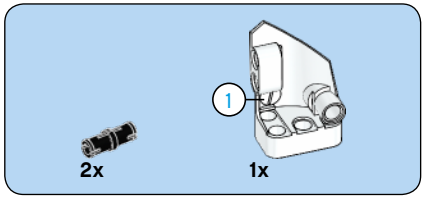

355

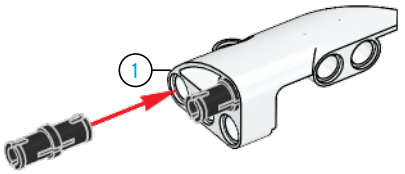

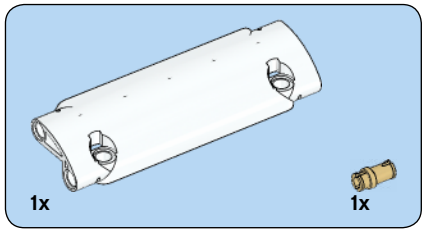

356

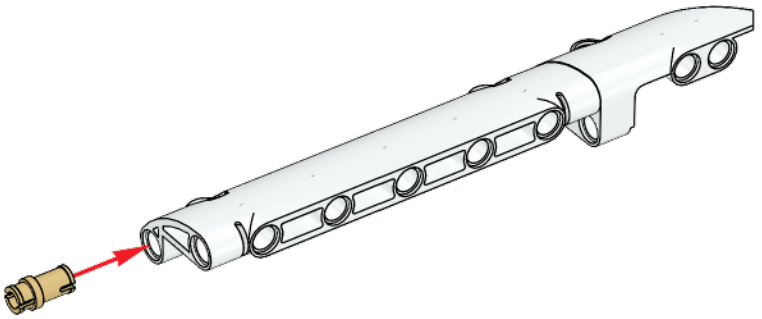

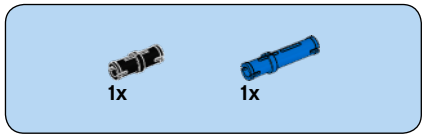

357

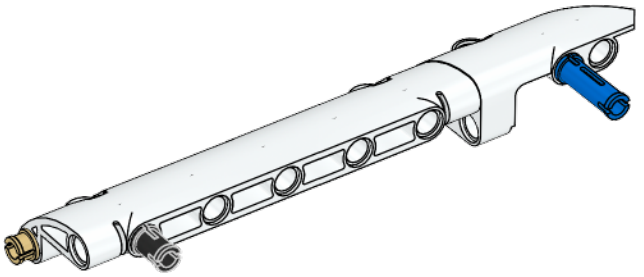

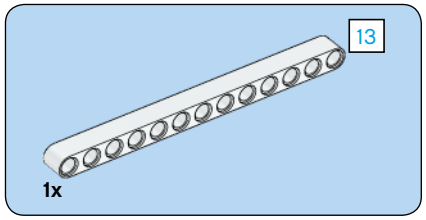

358

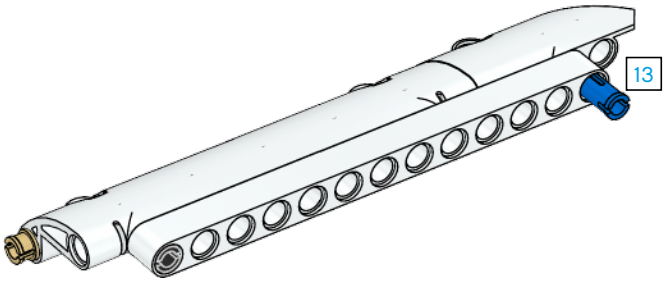

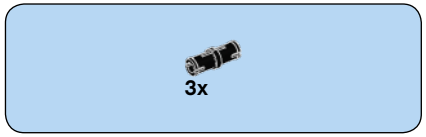

359

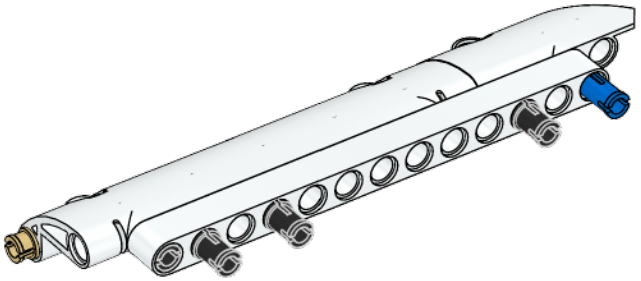

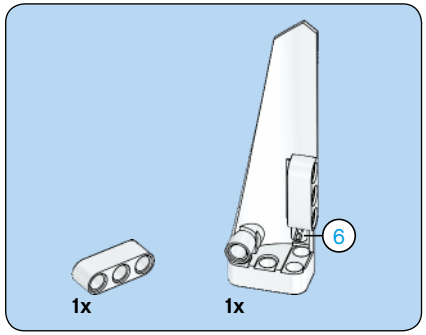

360

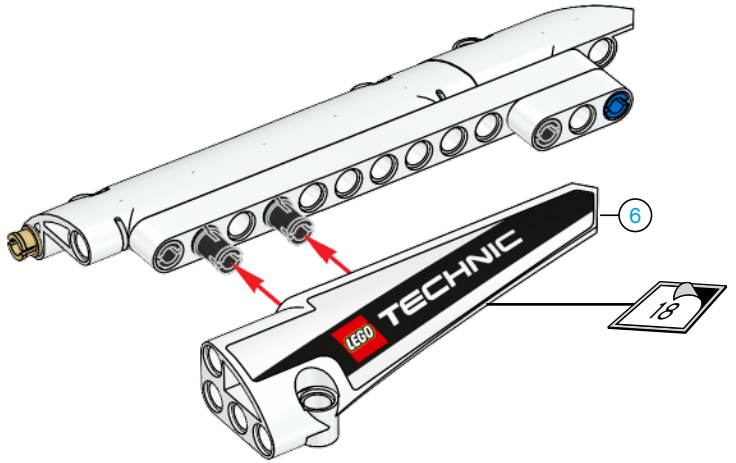

361

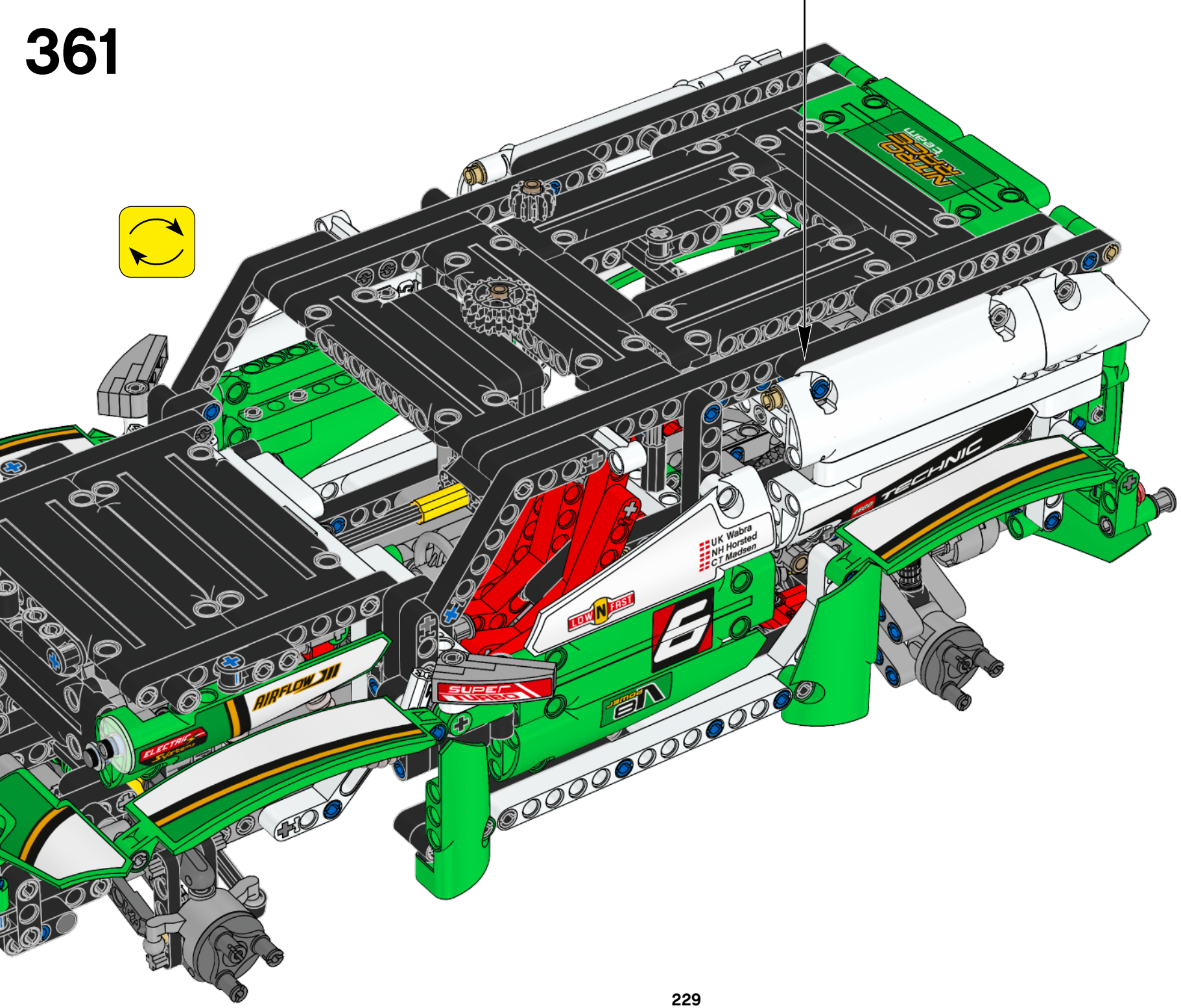

UK Wabra
NH Horsted
CT Madsen
LOW N FAST
6
TECHNIC
AIRFLOW 311
SUPER TURBO
ELECTRIC Systems

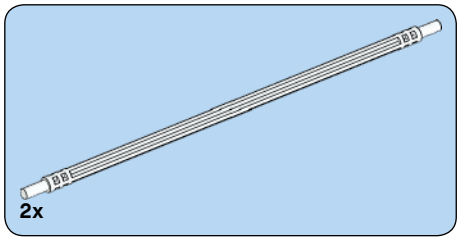

362

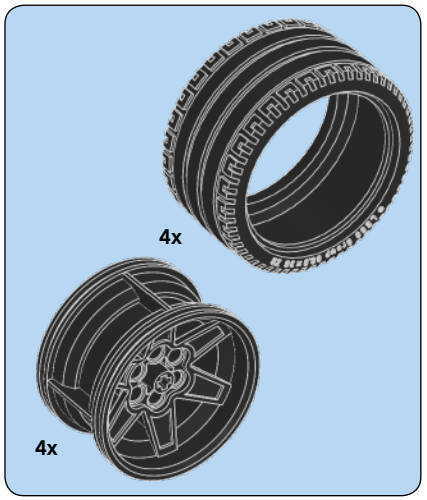

363

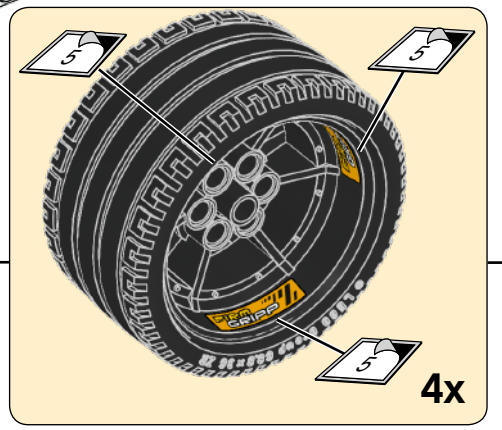

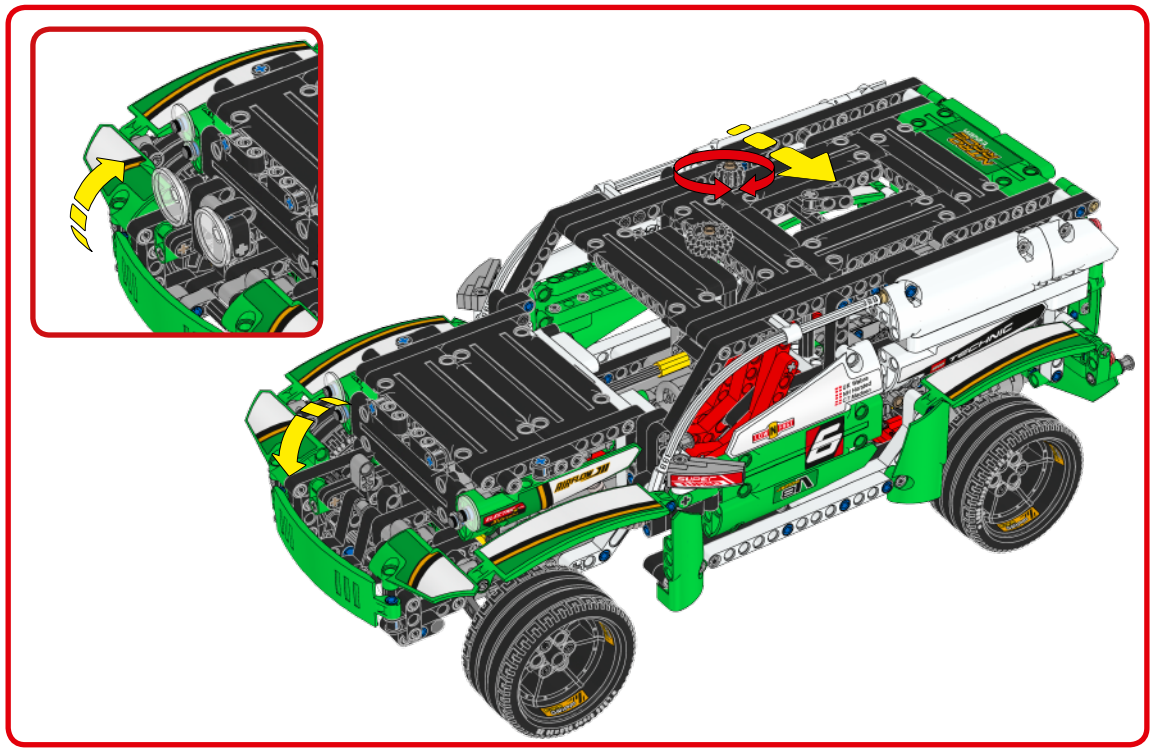

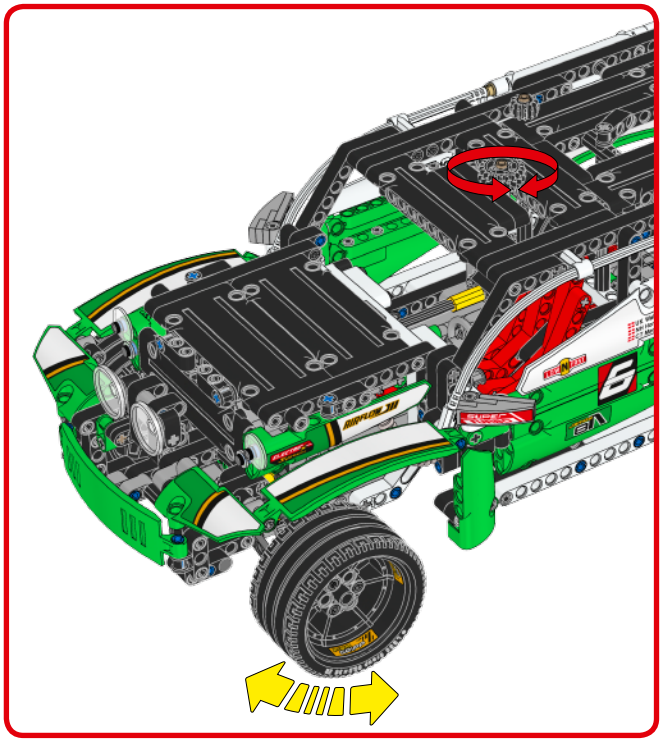

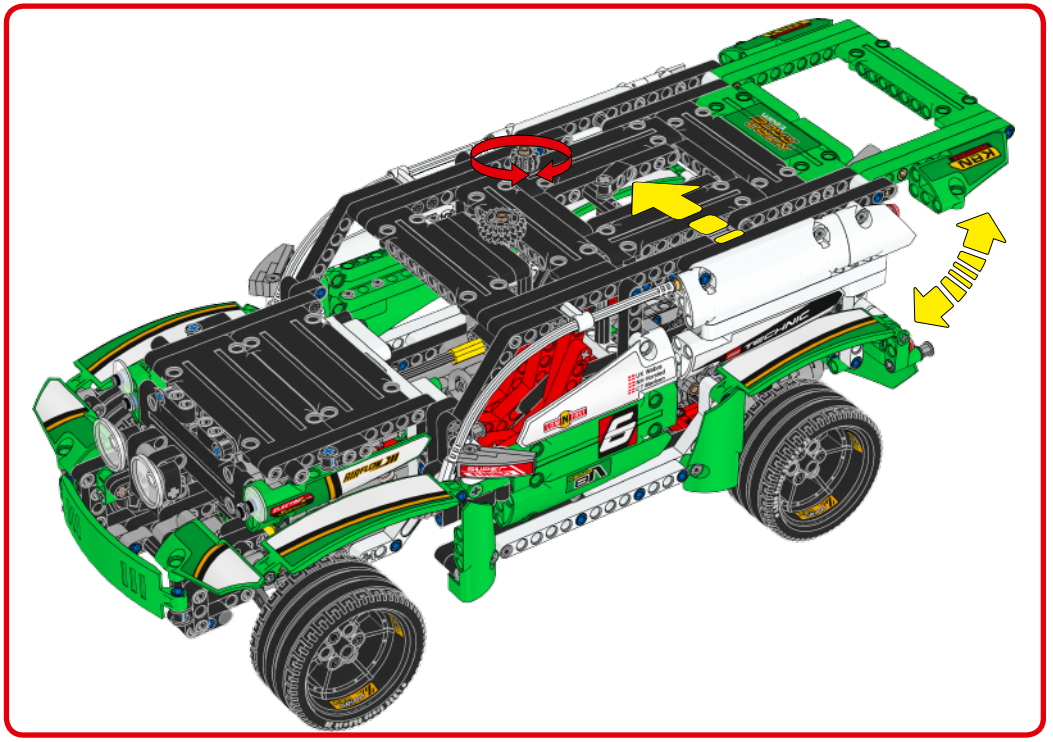

LEGO and the LEGO logo are trademarks of the/sont des marques de commerce du/son marcas registradas de LEGO Group. ©2015 The LEGO Group.